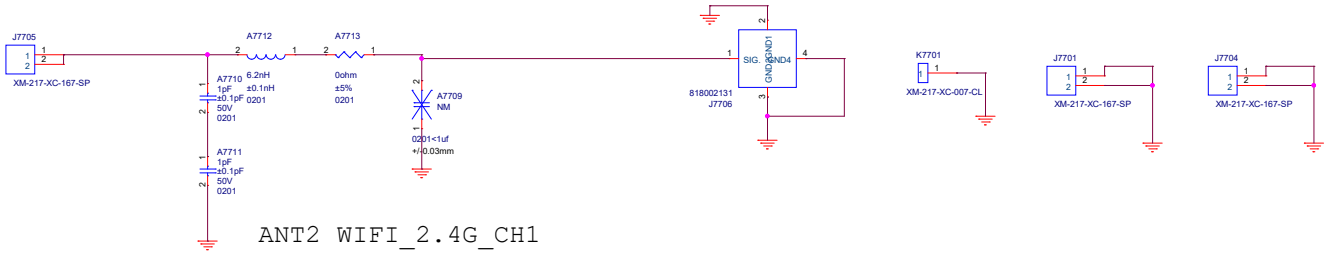

ANT2 WIFI_2.4G_CH1

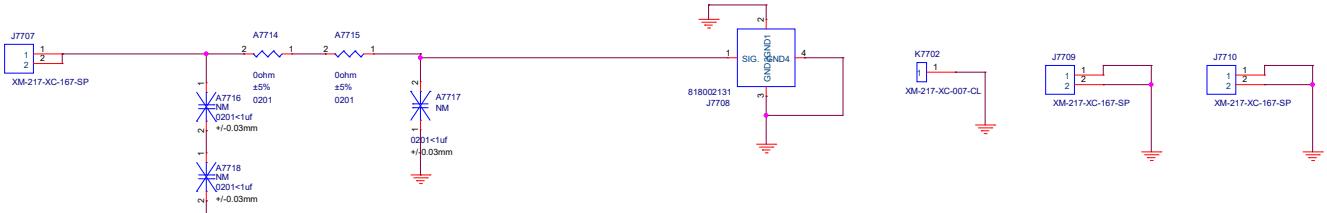

ANT2 WIFI_2.4G_CH1

Title	M80 SUB	
Size A3	Document Number <Doc>	P0
Date: Thursday, June 01, 2023	Sheet 1 of 5	

GND

ANT1 WIFI_5G_CH1

ANT0 WIFI_5G_CH0+2.4G_CH0

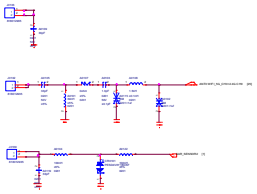

SAR SENSOR

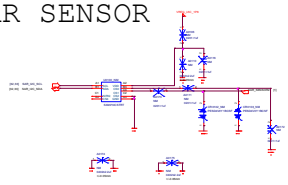

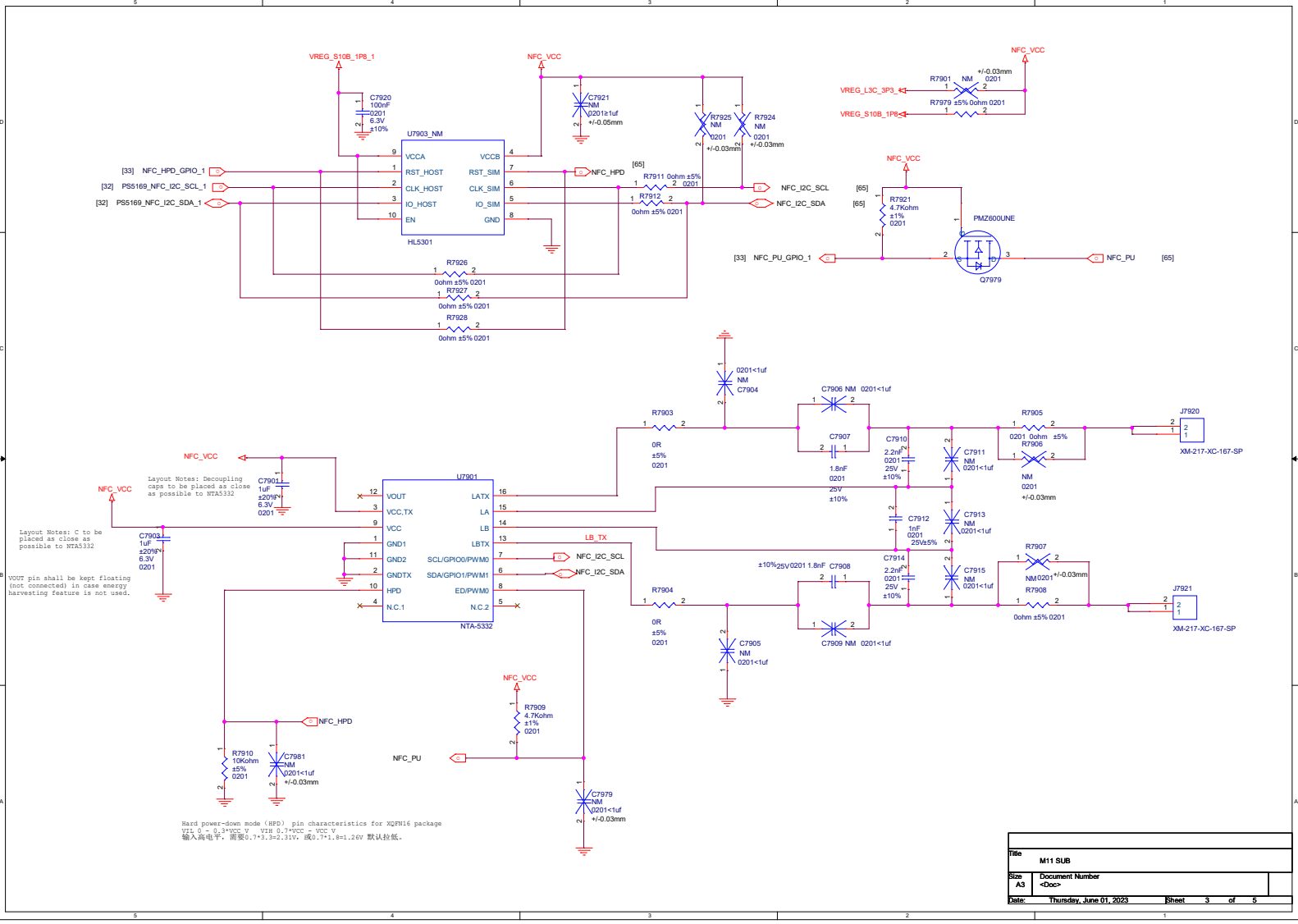

Title	M11 SUB
Size A3	Document Number <Doc>
Date: Thursday, June 01, 2023	Sheet 3 of 5

MIC

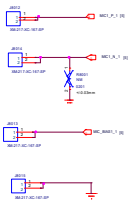

HAPTICS

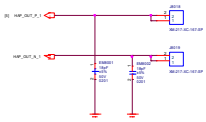

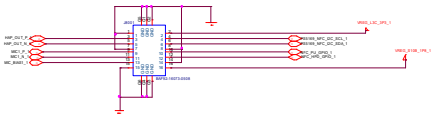

Close to Type-C 0306

Title	MIC HAP
Size	Document Number
A3	<Rev>
Date:	Monday, July 1, 2024 Sheet of

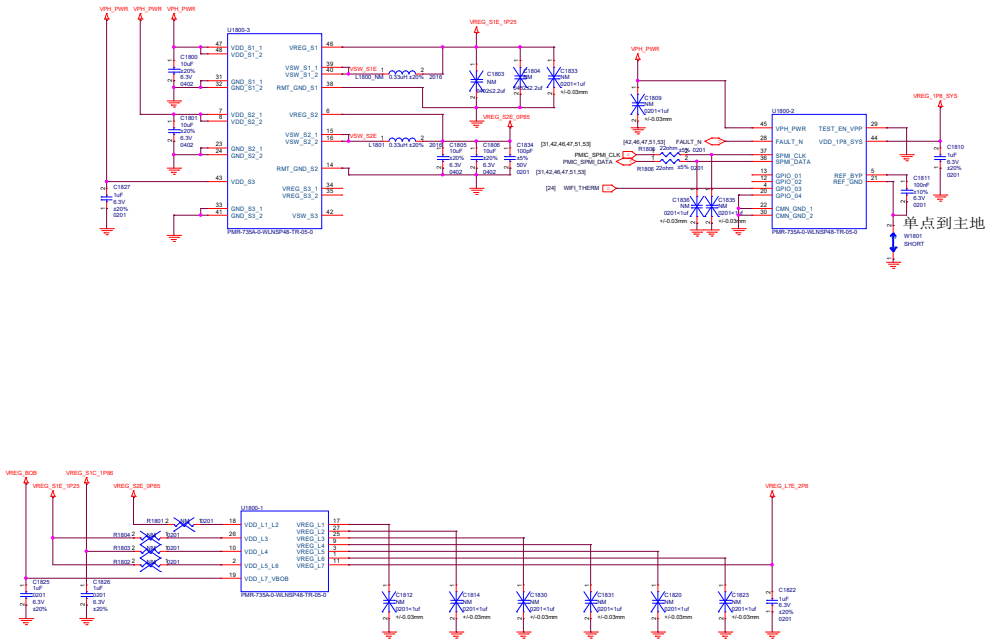

Title:	MBB_MAIN
Size: A2	Document Number: Reserved(for 5G-WTR.I)
Date: Thursday, June 01, 2023	Sheet 18

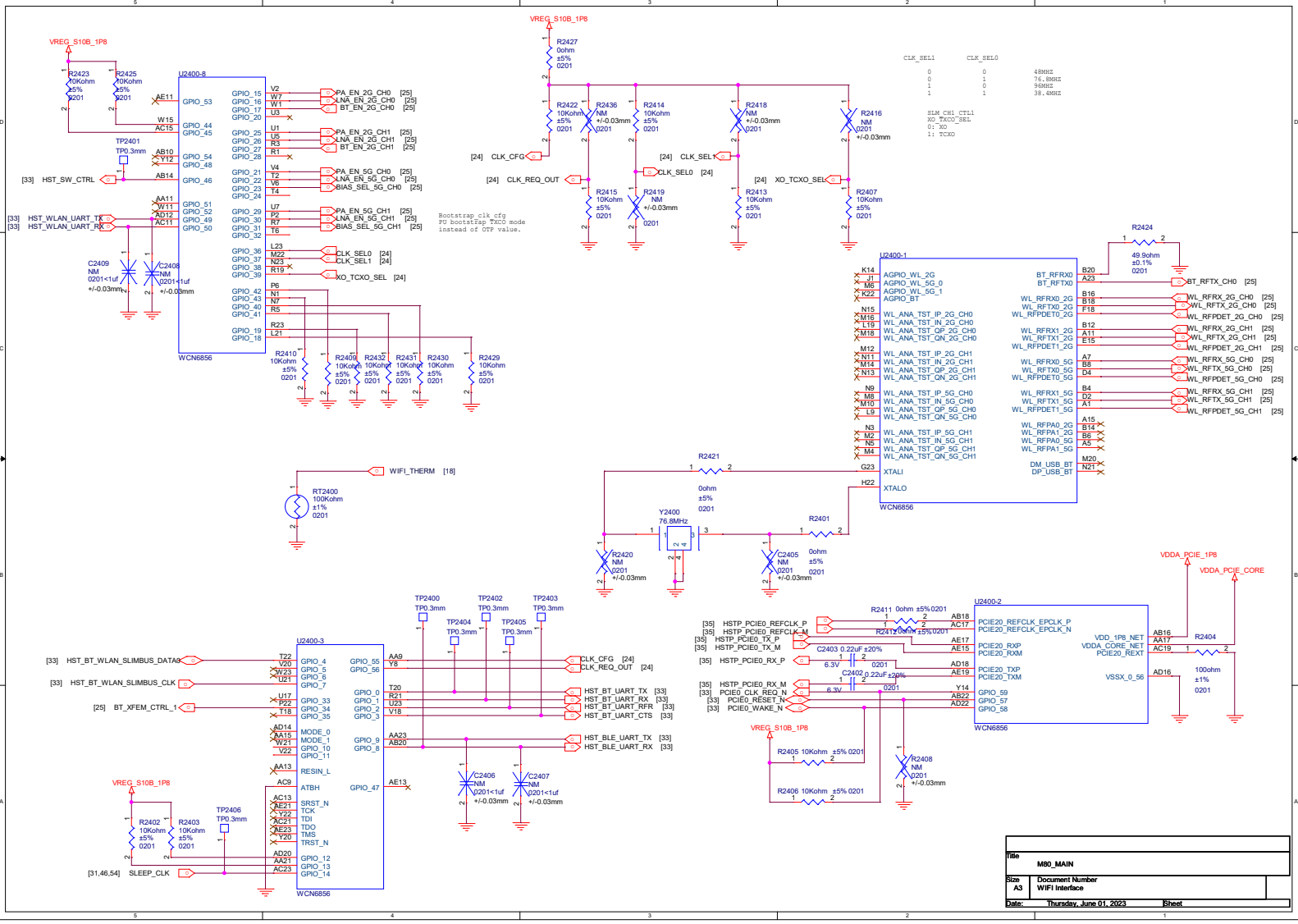

Title	M80_MAIN
Size A3	Document Number WIFI Interface
Date: Thursday, June 01, 2023	Sheet

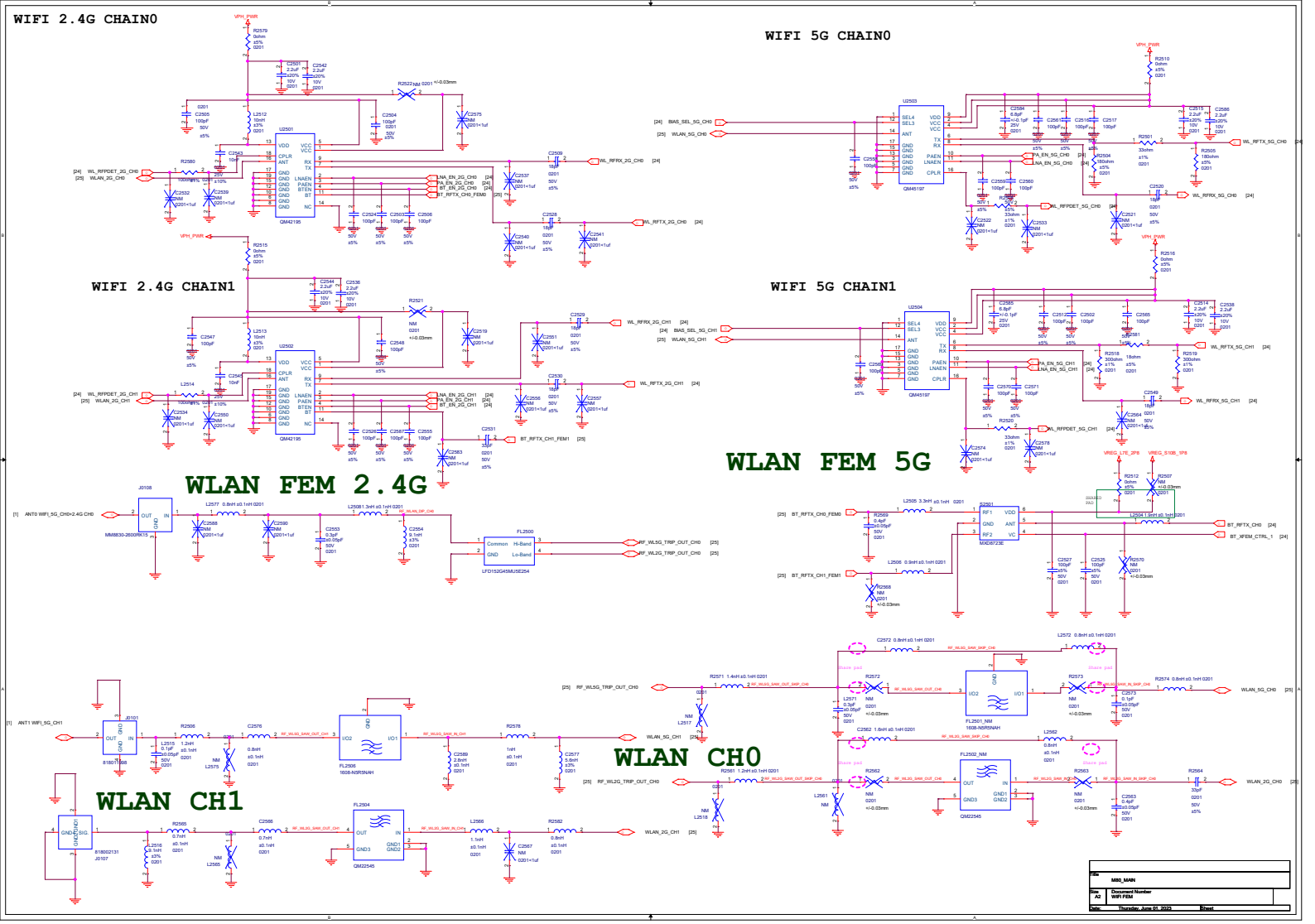
WIFI 2.4G CHAIN0
WIFI 5G CHAIN0
WIFI 2.4G CHAIN1
WIFI 5G CHAIN1
WLAN FEM 2.4G
WLAN FEM 5G
WLAN CH0
WLAN CH1
U2501
QM42195
U2502
QM42195
U2503
QM45197
U2504
QM45197
J0108
MM8830-2600RK15
FL2500
LFD152G45MU5E254
J0101
818072168
FL2506
1608-A0R3NAH
FL2504
QM22545
J0107
818022131
FL2501_NM
1608-A0R3NAH
FL2502_NM
QM22545
U2501
U2502
U2503
U2504
J0101
J0107
J0108
FL2500
FL2501_NM
FL2502_NM
FL2504
FL2506
VPH_PWR
WL_RFFDET_2G_CH0
WLAN_2G_CH0
WL_RFFDET_2G_CH1
WLAN_2G_CH1
WL_RFRX_2G_CH0
WL_RFTX_2G_CH0
WL_RFRX_2G_CH1
WL_RFTX_2G_CH1
BIAS_SEL_5G_CH0
WLAN_5G_CH0
BIAS_SEL_5G_CH1
WLAN_5G_CH1
WL_RFTX_5G_CH0
WL_RFRX_5G_CH0
WL_RFFDET_5G_CH0
WL_RFTX_5G_CH1
WL_RFRX_5G_CH1
WL_RFFDET_5G_CH1
BT_RFTX_CH1_FEM1
BT_RFTX_CH0_FEM0
BT_RFTX_CH0
BT_XFEM_CTRL_1
ANT0 WIFI_5G_CH0+2.4G CH0
ANT1 WIFI_5G_CH1
RF_WL5G_TRIP_OUT_CH0
RF_WL2G_TRIP_OUT_CH0
WLAN_5G_CH1
WLAN_2G_CH1
WLAN_5G_CH0
WLAN_2G_CH0
VREG_LTE_2P8
VREG_S10B_1P8
MB0_MAIN
WIFI FEM
Thursday, June 01, 2023

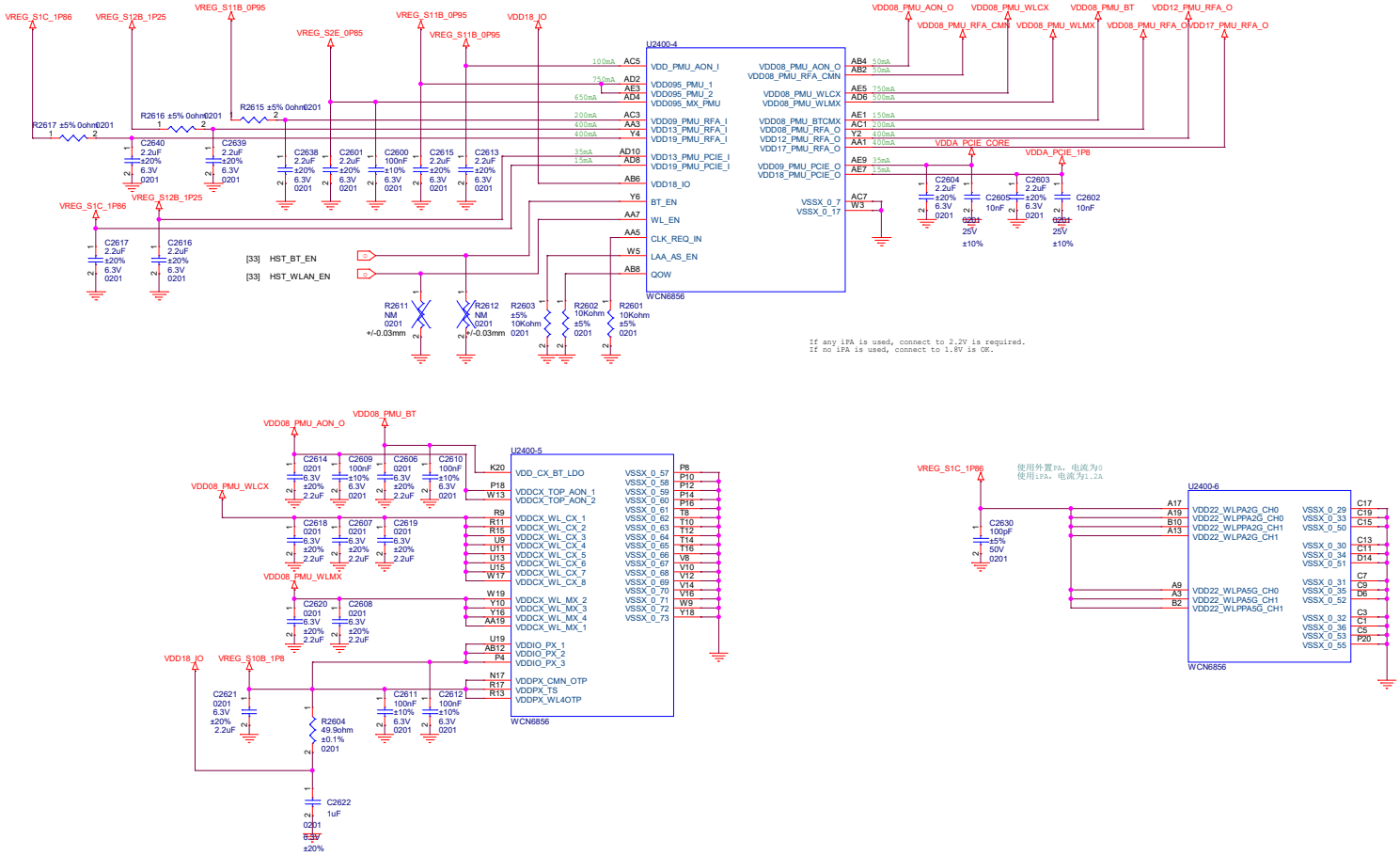

Title	M80_MAIN
Size A3	Document Number WIFI Decoupling1
Date: Thursday, June 01, 2023	Sheet 26

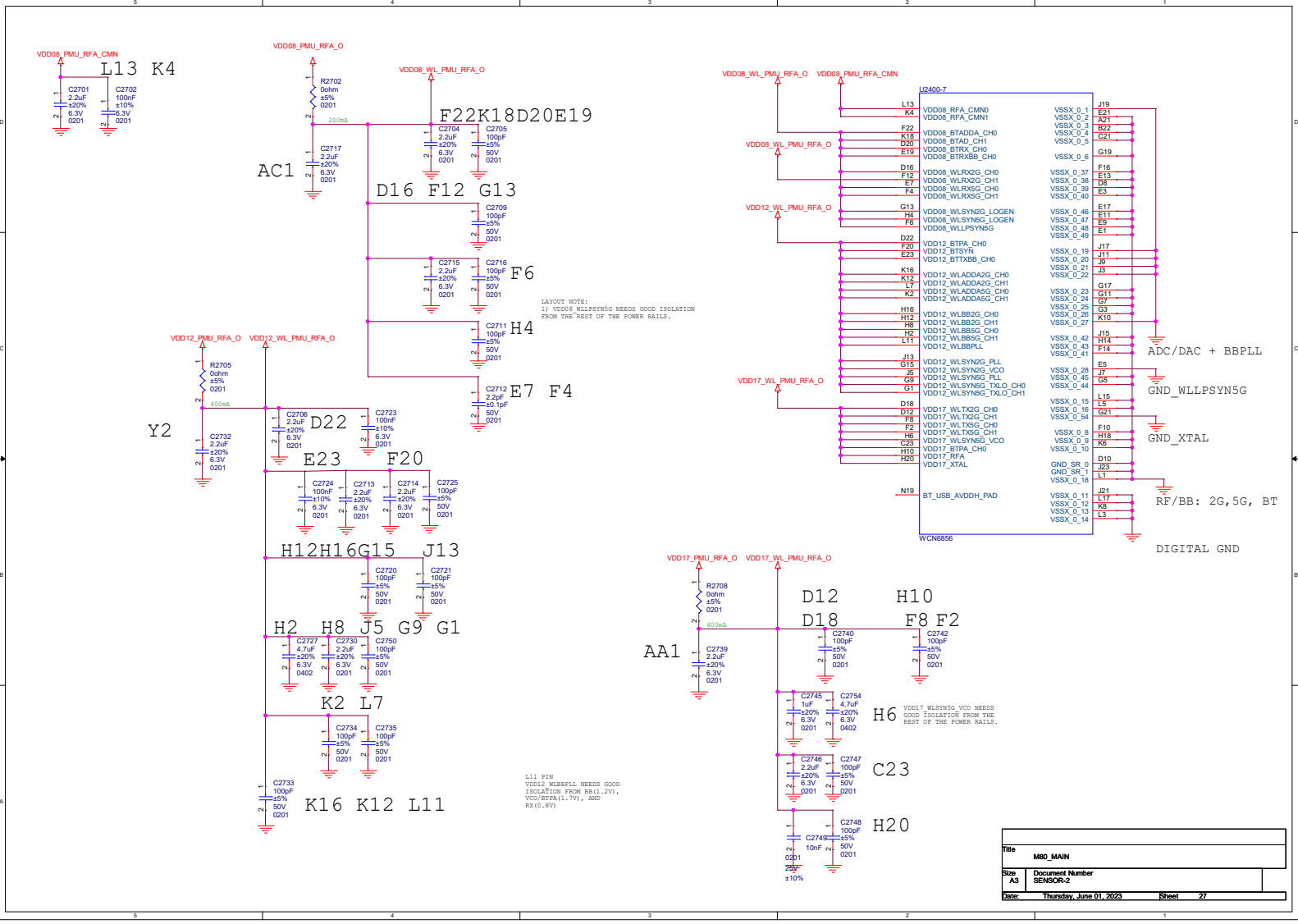
VDD08_PMU_RFA_CMN
L13 K4
C2701 2.2uF ±20% 6.3V 0201
C2702 100nF ±10% 6.3V 0201
VDD08_PMU_RFA_O
R2702 0ohm ±5% 0201
200mA
C2717 2.2uF ±20% 6.3V 0201
AC1
VDD08_WL_PMU_RFA_O
F22K18D20E19
C2704 2.2uF ±20% 6.3V 0201
C2705 100pF ±5% 50V 0201
D16 F12 G13
C2709 100pF ±5% 50V 0201
C2715 2.2uF ±20% 6.3V 0201
C2716 100pF ±5% 50V 0201
F6
C2711 100pF ±5% 50V 0201
H4
C2712 2.2pF ±0.1pF 50V 0201
E7 F4
LAYOUT NOTE:
1) VDD08_WLLPSYN5G NEEDS GOOD ISOLATION FROM THE REST OF THE POWER RAILS.
VDD12_PMU_RFA_O
VDD12_WL_PMU_RFA_O
R2705 0ohm ±5% 0201
400mA
Y2
C2732 2.2uF ±20% 6.3V 0201
C2706 2.2uF ±20% 6.3V 0201
D22
C2723 100nF ±10% 6.3V 0201
E23 F20
C2724 100nF ±10% 6.3V 0201
C2713 2.2uF ±20% 6.3V 0201
C2714 2.2uF ±20% 6.3V 0201
C2725 100pF ±5% 50V 0201
H12H16G15 J13
C2720 100pF ±5% 50V 0201
C2721 100pF ±5% 50V 0201
H2 H8 J5 G9 G1
C2727 4.7uF ±20% 6.3V 0402
C2730 2.2uF ±20% 6.3V 0201
C2750 100pF ±5% 50V 0201
K2 L7
C2734 100pF ±5% 50V 0201
C2735 100pF ±5% 50V 0201
C2733 100pF ±5% 50V 0201
K16 K12 L11
L11 PIN
VDD12_WLBBPLL NEEDS GOOD ISOLATION FROM BB(1.2V), VCO/BTPA(1.7V), AND RX(0.8V)
VDD08_WL_PMU_RFA_O
VDD08_PMU_RFA_CMN
VDD08_WL_PMU_RFA_O
VDD12_WL_PMU_RFA_O
VDD17_WL_PMU_RFA_O
U2400-7
L13 VDD08_RFA_CMN0
K4 VDD08_RFA_CMN1
F22 VDD08_BTADDA_CH0
K18 VDD08_BTAD_CH1
D20 VDD08_BTRX_CH0
E19 VDD08_BTRXBB_CH0
D16 VDD08_WLRX2G_CH0
F12 VDD08_WLRX2G_CH1
E7 VDD08_WLRX5G_CH0
F4 VDD08_WLRX5G_CH1
G13 VDD08_WLSYN2G_LOGEN
H4 VDD08_WLSYN5G_LOGEN
F6 VDD08_WLLPSYN5G
D22 VDD12_BTPA_CH0
F20 VDD12_BTSYN
E23 VDD12_BTTXBB_CH0
K16 VDD12_WLADDA2G_CH0
K12 VDD12_WLADDA2G_CH1
L7 VDD12_WLADDA5G_CH0
K2 VDD12_WLADDA5G_CH1
H16 VDD12_WLBB2G_CH0
H12 VDD12_WLBB2G_CH1
H8 VDD12_WLBB5G_CH0
H2 VDD12_WLBB5G_CH1
L11 VDD12_WLBBPLL
J13 VDD12_WLSYN2G_PLL
J5 VDD12_WLSYN2G_VCO
G9 VDD12_WLSYN5G_PLL
G1 VDD12_WLSYN5G_TXLO_CH0
VDD12_WLSYN5G_TXLO_CH1
D18 VDD17_WLTX2G_CH0
D12 VDD17_WLTX2G_CH1
F8 VDD17_WLTX5G_CH0
F2 VDD17_WLTX5G_CH1
H6 VDD17_WLSYN5G_VCO
C23 VDD17_BTPA_CH0
H10 VDD17_RFA
H20 VDD17_XTAL
N19 BT_USB_AVDDH_PAD
WCN6856
VSSX_0_1 E21
VSSX_0_2 A21
VSSX_0_3 B22
VSSX_0_4 C21
VSSX_0_5
VSSX_0_6 G19
VSSX_0_37 F16
VSSX_0_38 E13
VSSX_0_39 D8
VSSX_0_40 E3
VSSX_0_46 E17
VSSX_0_47 E11
VSSX_0_48 E9
VSSX_0_49 E1
VSSX_0_19 J17
VSSX_0_20 J11
VSSX_0_21 J9
VSSX_0_22 J3
VSSX_0_23 G17
VSSX_0_24 G11
VSSX_0_25 G7
VSSX_0_26 G3
VSSX_0_27 K10
VSSX_0_42 J15
VSSX_0_43 H14
VSSX_0_41 F14
VSSX_0_28 E5
VSSX_0_45 J7
VSSX_0_44 G5
VSSX_0_15 L15
VSSX_0_16 L5
VSSX_0_54 G21
VSSX_0_8 F10
VSSX_0_9 H18
VSSX_0_10 K6
GND_SR_0 D10
GND_SR_1 J23
VSSX_0_18 L1
VSSX_0_11 J21
VSSX_0_12 L17
VSSX_0_13 K8
VSSX_0_14 L3
ADC/DAC + BBPLL
GND_WLLPSYN5G
GND_XTAL
RF/BB: 2G,5G, BT
DIGITAL GND
VDD17_PMU_RFA_O
VDD17_WL_PMU_RFA_O
R2708 0ohm ±5% 0201
400mA
AA1
C2739 2.2uF ±20% 6.3V 0201
D12 D18
H10 F8 F2
C2740 100pF ±5% 50V 0201
C2742 100pF ±5% 50V 0201
C2745 1uF ±20% 6.3V 0201
C2754 4.7uF ±20% 6.3V 0402
H6
VDD17_WLSYN5G_VCO NEEDS GOOD ISOLATION FROM THE REST OF THE POWER RAILS.
C2746 2.2uF ±20% 6.3V 0201
C2747 100pF ±5% 50V 0201
C23
C2748 100pF ±5% 50V 0201
C2749 10nF ±10% 25V 0201
H20
Title
M80_MAIN
Size A3
Document Number SENSOR-2
Date: Thursday, June 01, 2023
Sheet 27

Place all ZQ resistors close to SM8475

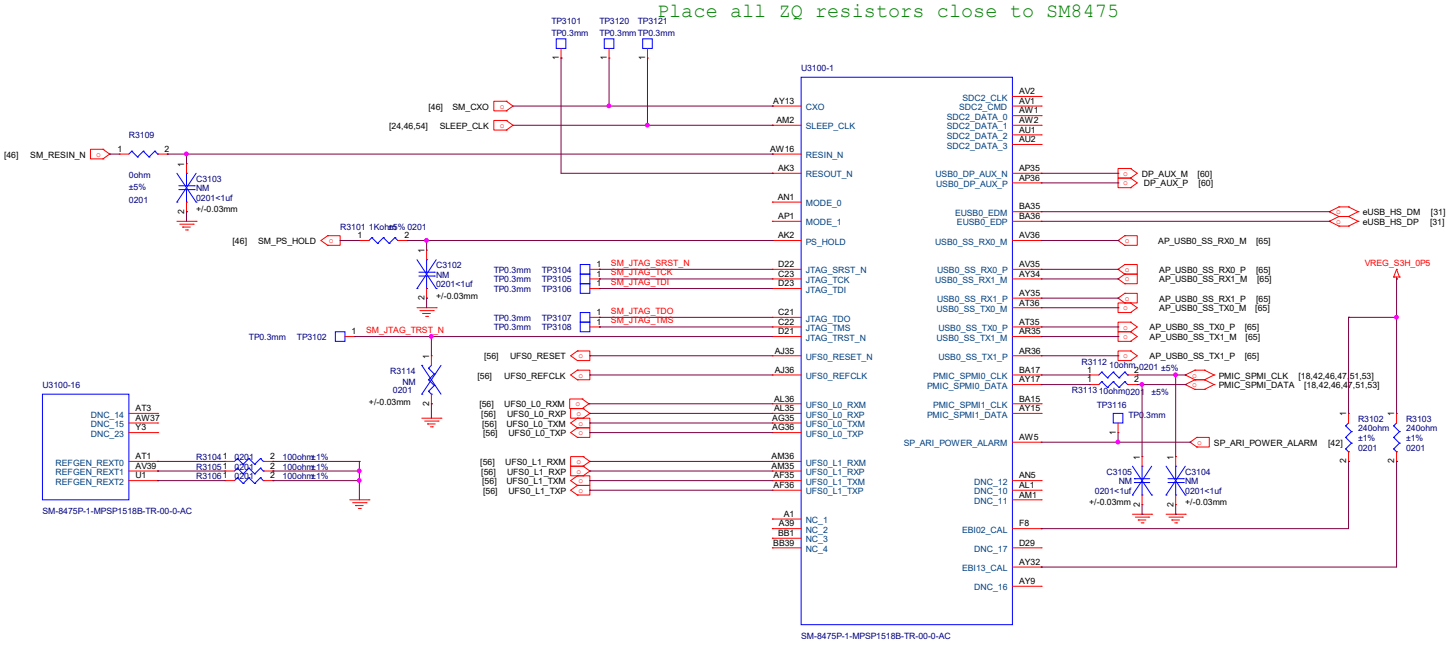

MSM skin temperature thermistor

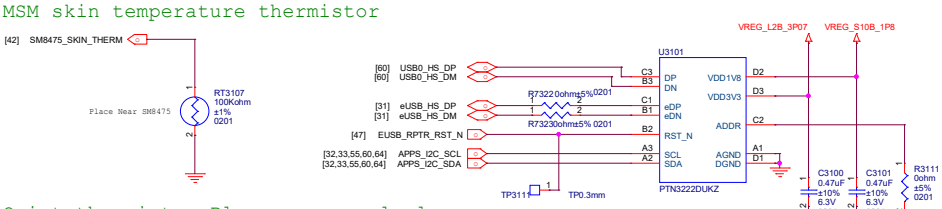

Quiet thermistor Place on a cool place

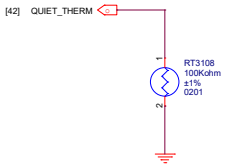

I2C ADDRESS:0X4F

Title	M80_MAIN
Size A3	Document Number SM8475 Control
Date: Thursday, June 01, 2023	Sheet 31 of 77

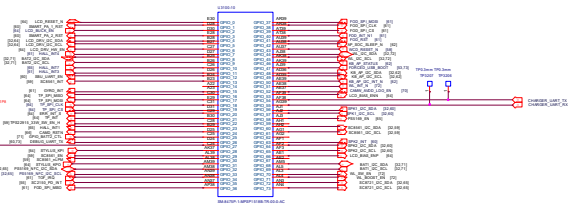

Title:	MBB_BOARD
Size: A4	Document Number: 2000-01-[illegible]
Date: Thursday, June 08, 2023	Sheet 10

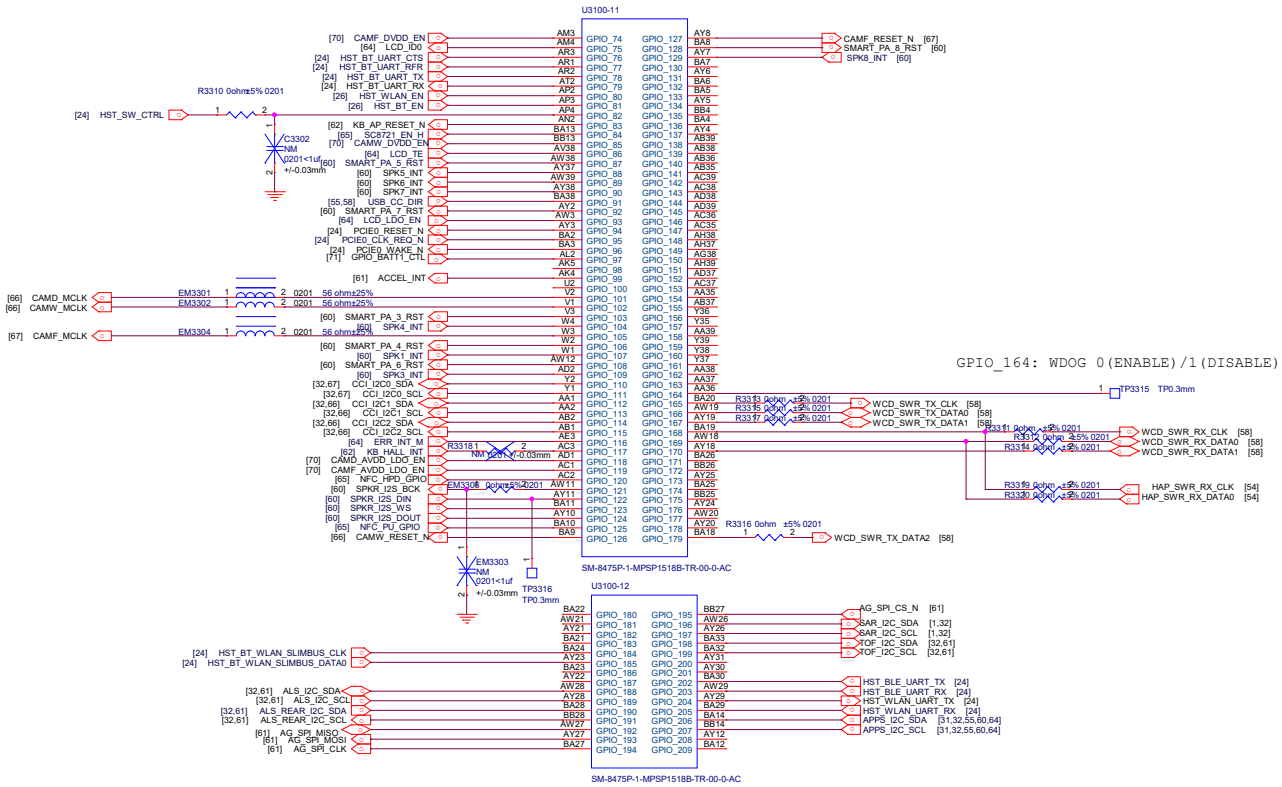

Title	M80_MAIN
Size A3	Document Number SM8475 GPIO-2
Date: Thursday, June 01, 2023	Sheet 33

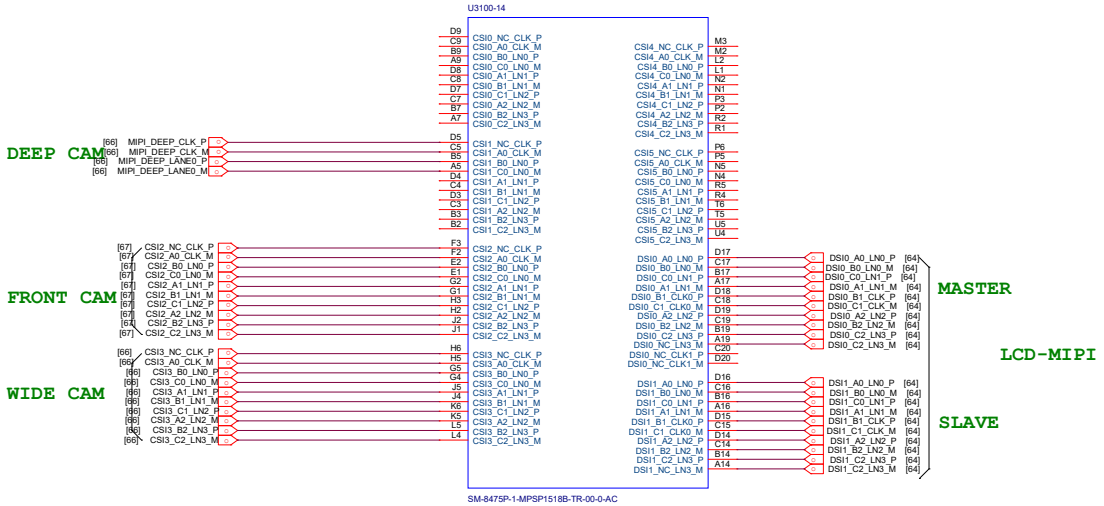

Title	M80_MAIN
Size A3	Document Number SM8475 MIPI
Date: Thursday, June 01, 2023	Sheet 34

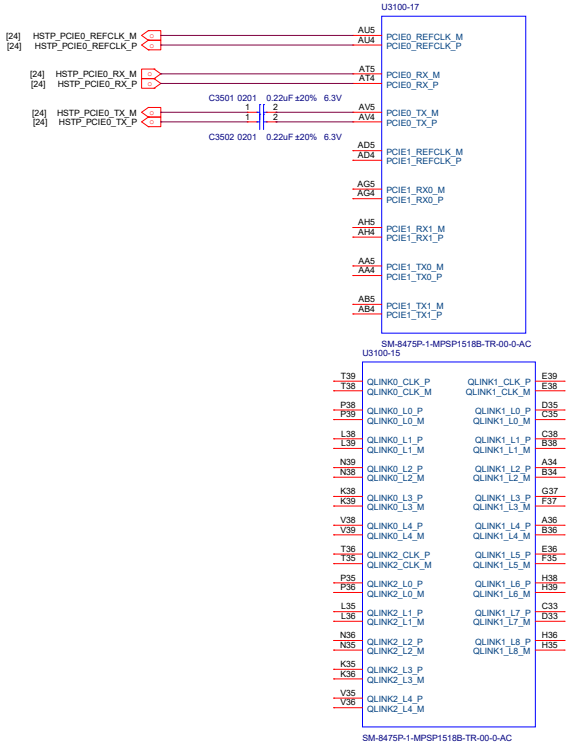

QLINK1 for mmW

Title	M80_MAIN
Size A3	Document Number SM8475 MIPI
Date: Thursday, June 01, 2023	Sheet 35

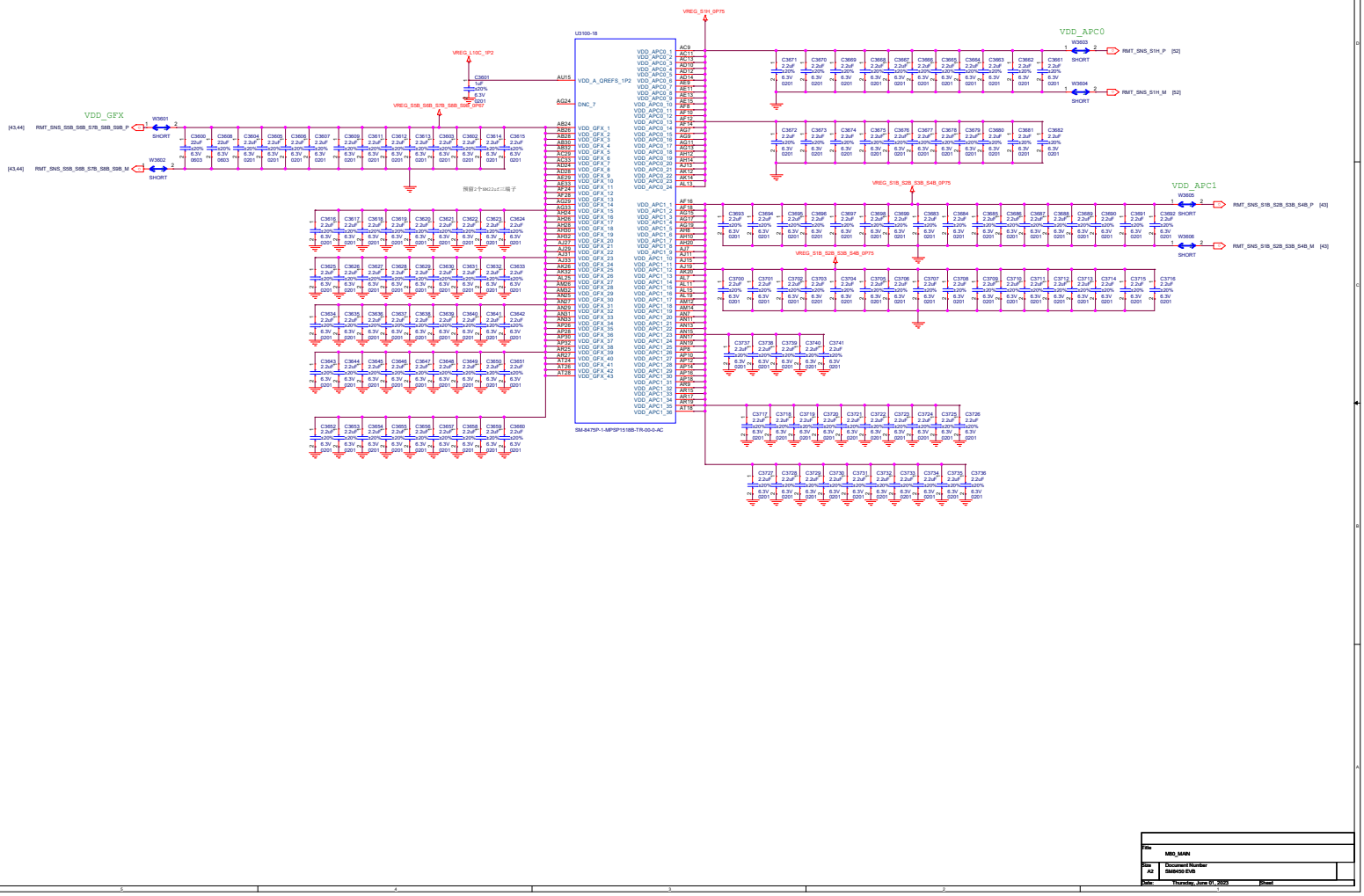

File	M80_MAIN
Size	A2
Document Number	SM8450 EVB
Date:	Thursday, June 01, 2023
Sheet	

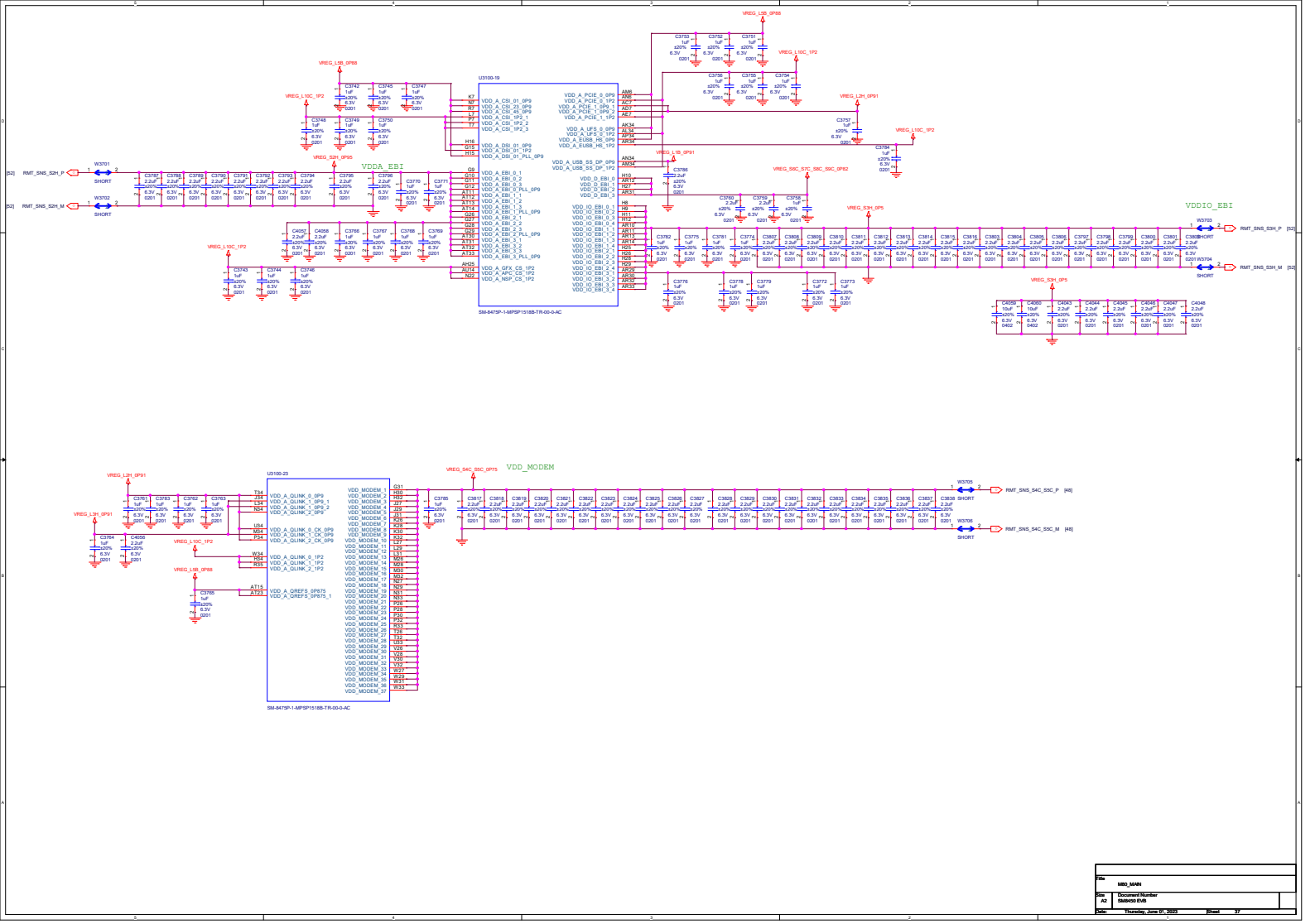

Title	M80_MAIN
Size A2	Document Number SM8450 EVB
Date: Thursday, June 01, 2023	Sheet 37

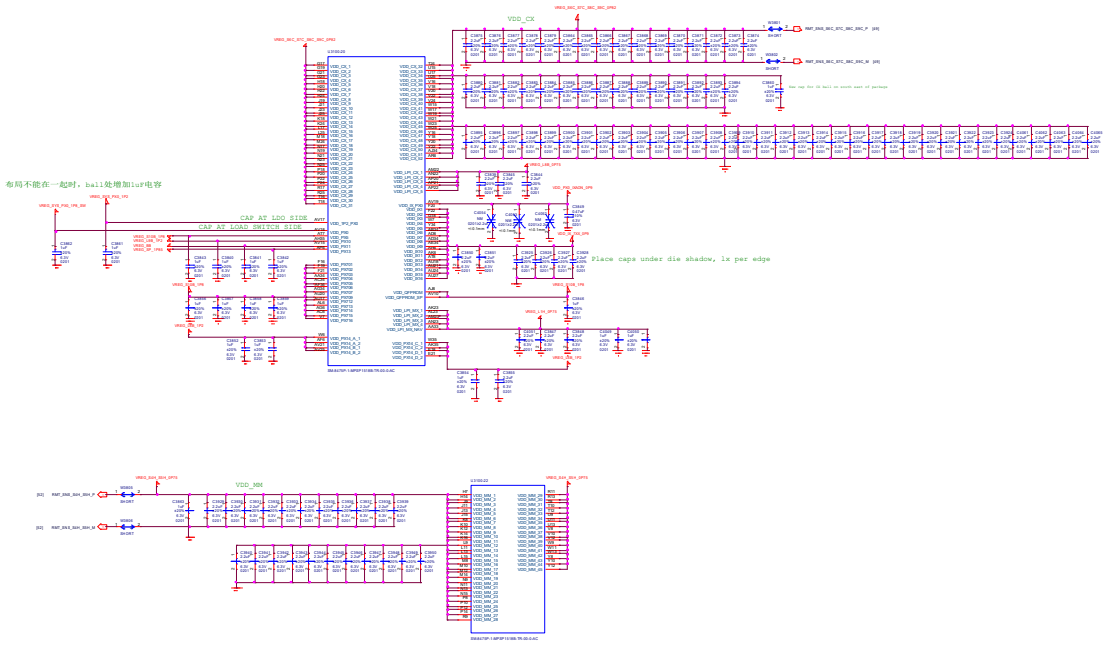
VDD_CX
布局不能在一起时，ball处增加lup电容
CAP AT LDO SIDE
CAP AT LOAD SWITCH SIDE
Place caps under die shadow, 1x per edge

VDD_MM

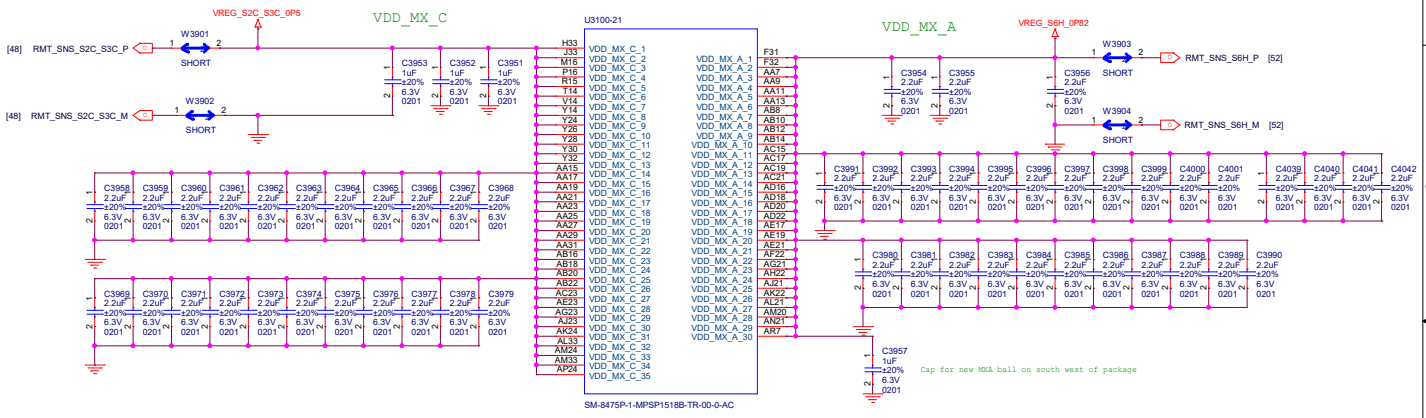

Title	M80_MAIN
Size A3	Document Number SM8450 EVB
Date: Thursday, June 01, 2023	Sheet 39 of 77

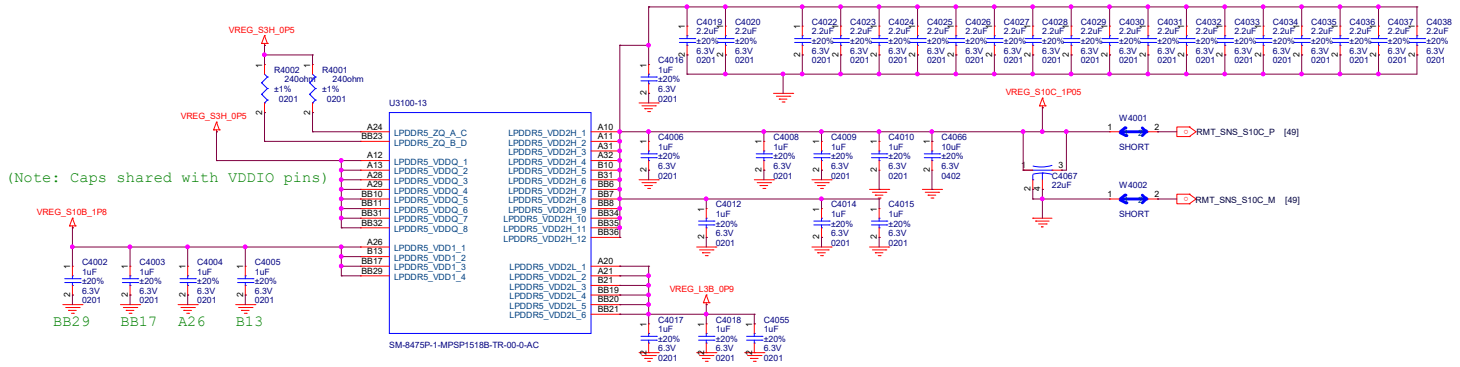

Title	M80_MAIN
Size A3	Document Number SM8450 EVB
Date: Thursday, June 01, 2023	Sheet

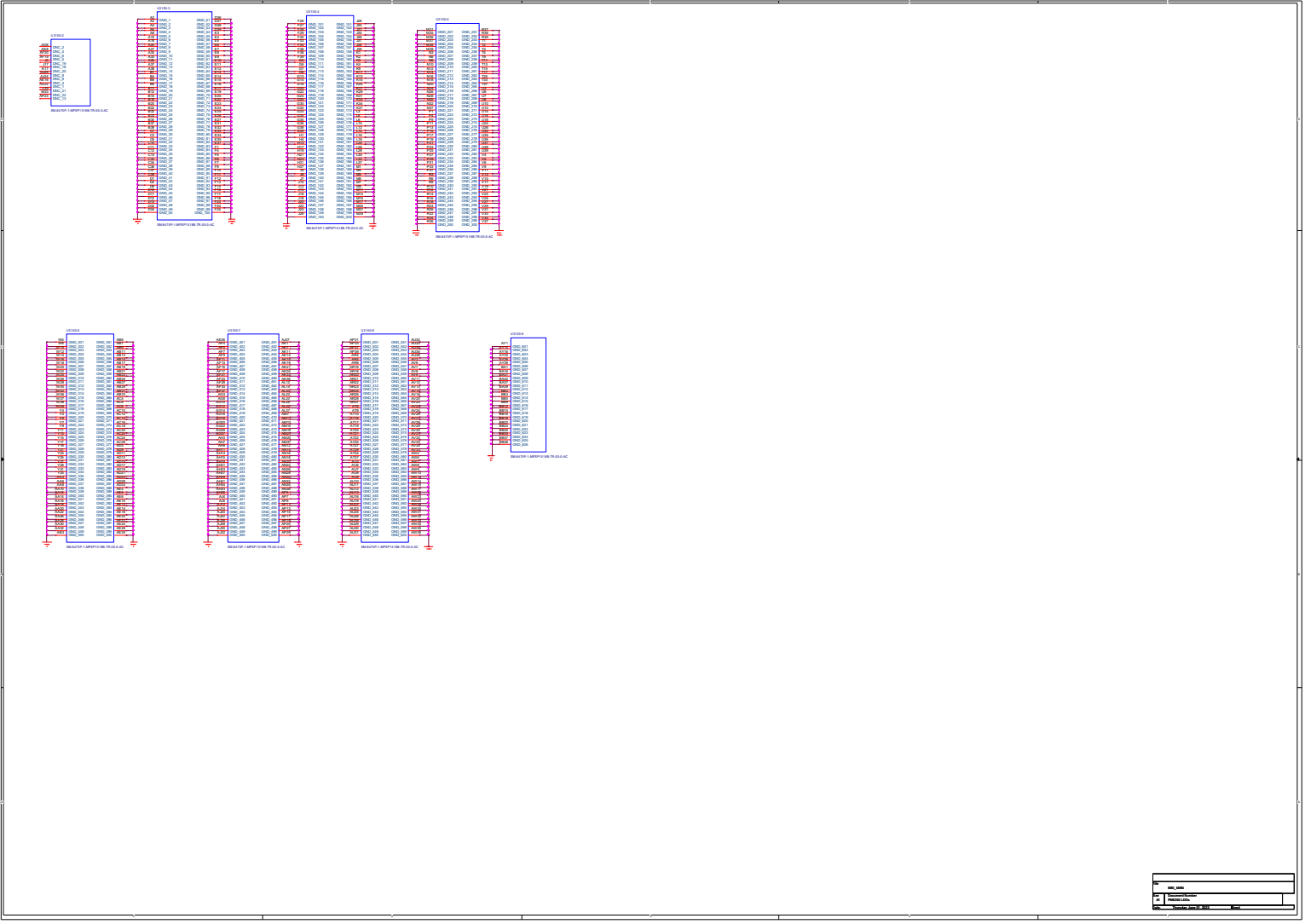

Title	MB_SMN
Size	Document Number
A	PM8018 LDOs
Date: Tuesday, June 19, 2012	Sheet

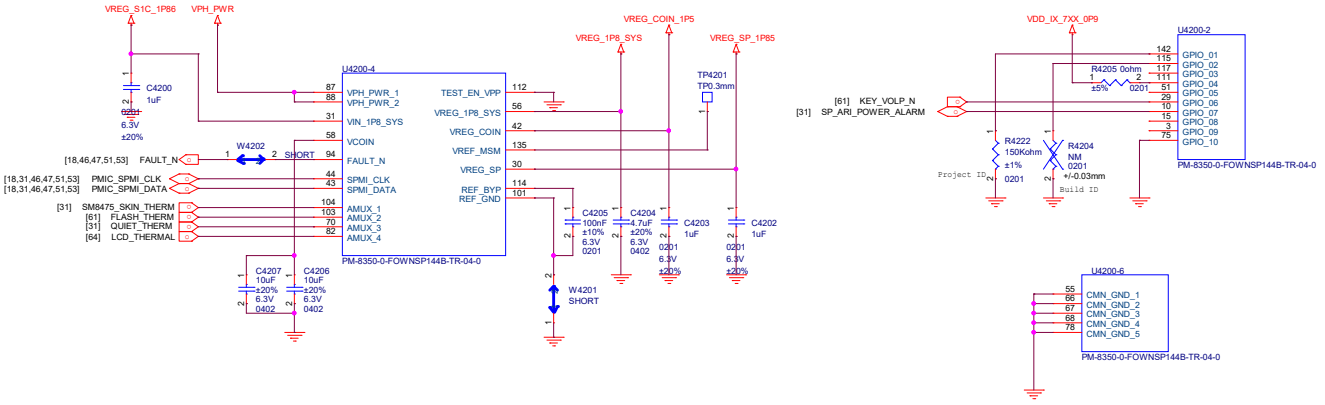

Title	M80_MAIN	
Size A3	Document Number PM8350 LDOs	
Date: Thursday, June 01, 2023	Sheet 42 of	

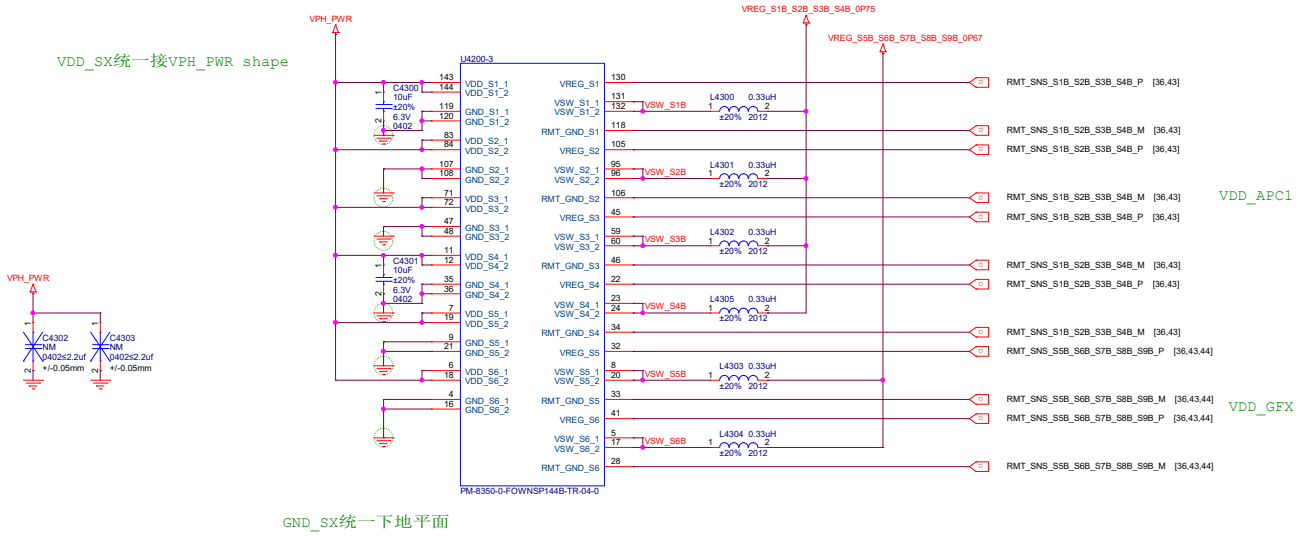

Title	M80_MAIN
Size A3	Document Number PM8350 LDOs
Date: Thursday, June 01, 2023	Sheet 43 of 77

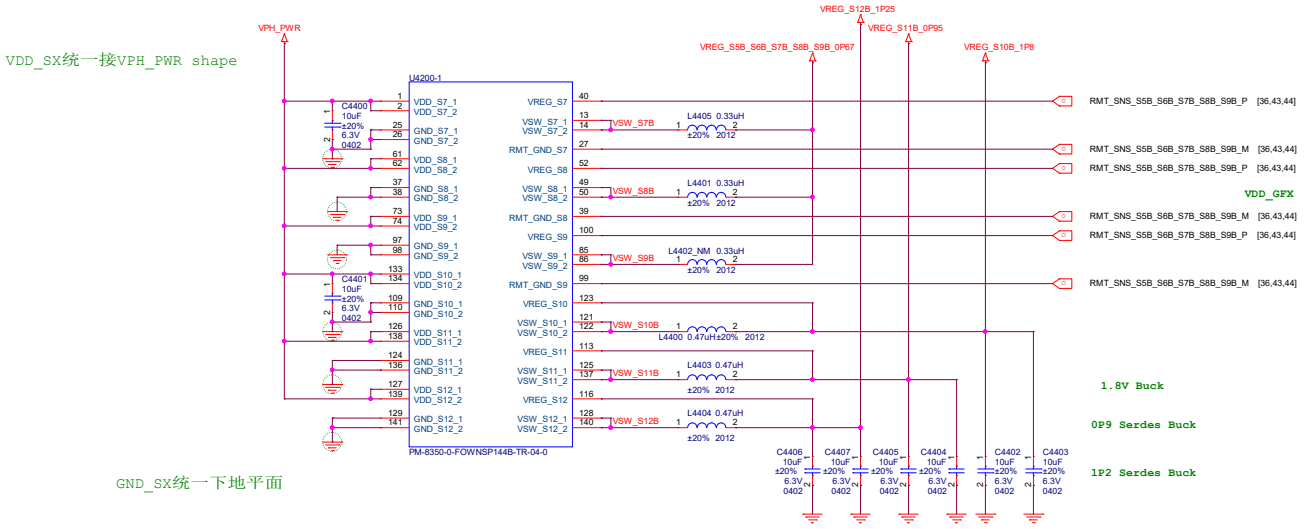

Title	M80_MAIN
Size A3	Document Number PM8350 LDOs
Date: Thursday, June 01, 2023	Sheet 44

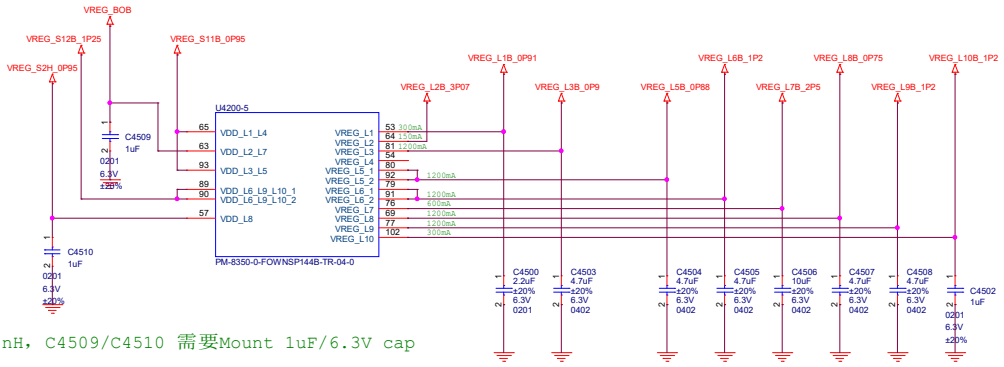

输入ESL大于15nH，C4509/C4510 需要Mount 1uF/6.3V cap

Title	M80_MAIN
Size A3	Document Number PM8350 LDOs
Date: Thursday, June 01, 2023	Sheet

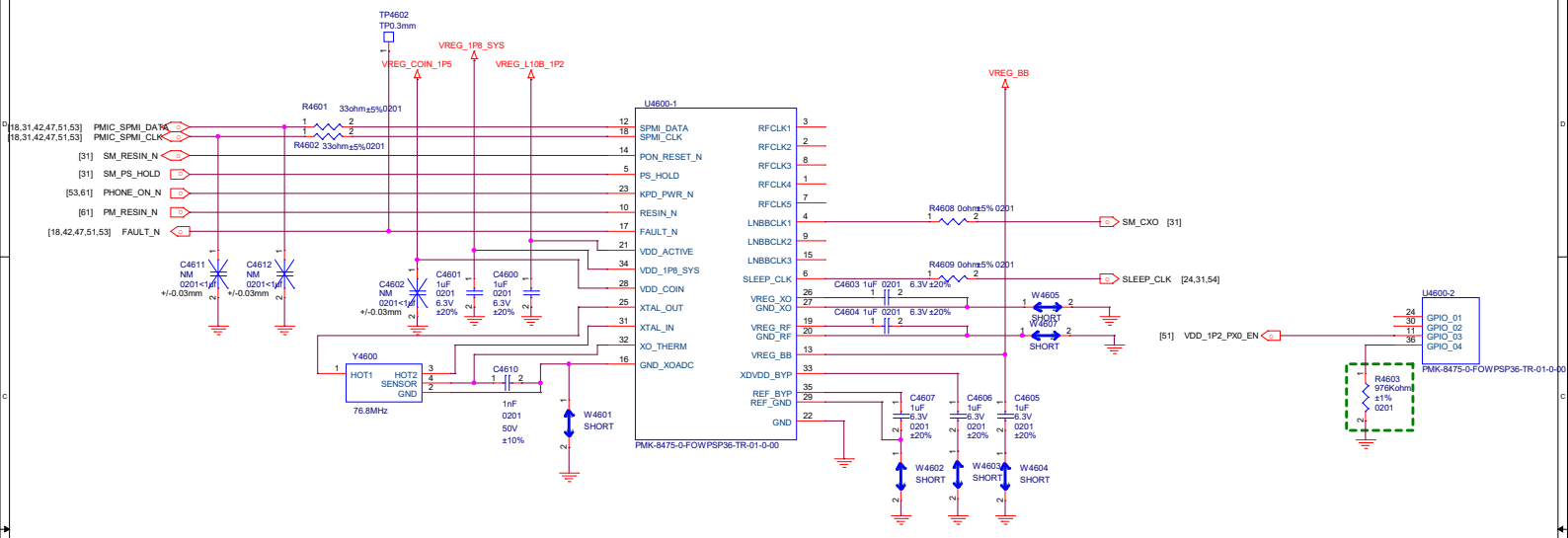

Options	Typical resistor value (Ω)	SD card options	GPIO_02A vs. GPIO_03A EN (PMK8475)	GPIO_05B (PM8350) PON trigger polarity
0-7 (Reserved)	–	–	–	–
8	113000	SD card LDO enabled	EXT_LDO_EN_GPIO02	Active high
9	147000	SD card LDO enabled	EXT_LDO_EN_GPIO02	Active low [1]
10	191000	SD card LDO enabled	EXT_LDO_EN_GPIO03	Active high
11	255555	SD card LDO enabled	EXT_LDO_EN_GPIO03	Active low [1]
12	357000	Skip SD card LDO enable	EXT_LDO_EN_GPIO02	Active high
13	536000	Skip SD card LDO enable	EXT_LDO_EN_GPIO02	Active low [1]
14	976666	Skip SD card LDO enable	EXT_LDO_EN_GPIO03	Active high
15	3090000	Skip SD card LDO enable	EXT_LDO_EN_GPIO03	Active low [1]

1. In the options that GPIO_05B (PM8350) is configured as active low, it is assumed that QTI charger PMIC (that is, PM8350B/BH/BHS) is not present, therefore the PON trigger from PM8350B/BH/BHS will not be acknowledged by PMK8350 PBS.

Title	M80_MAIN	
Size A3	Document Number PMK8475	
Date: Thursday, June 01, 2023	Sheet 46	

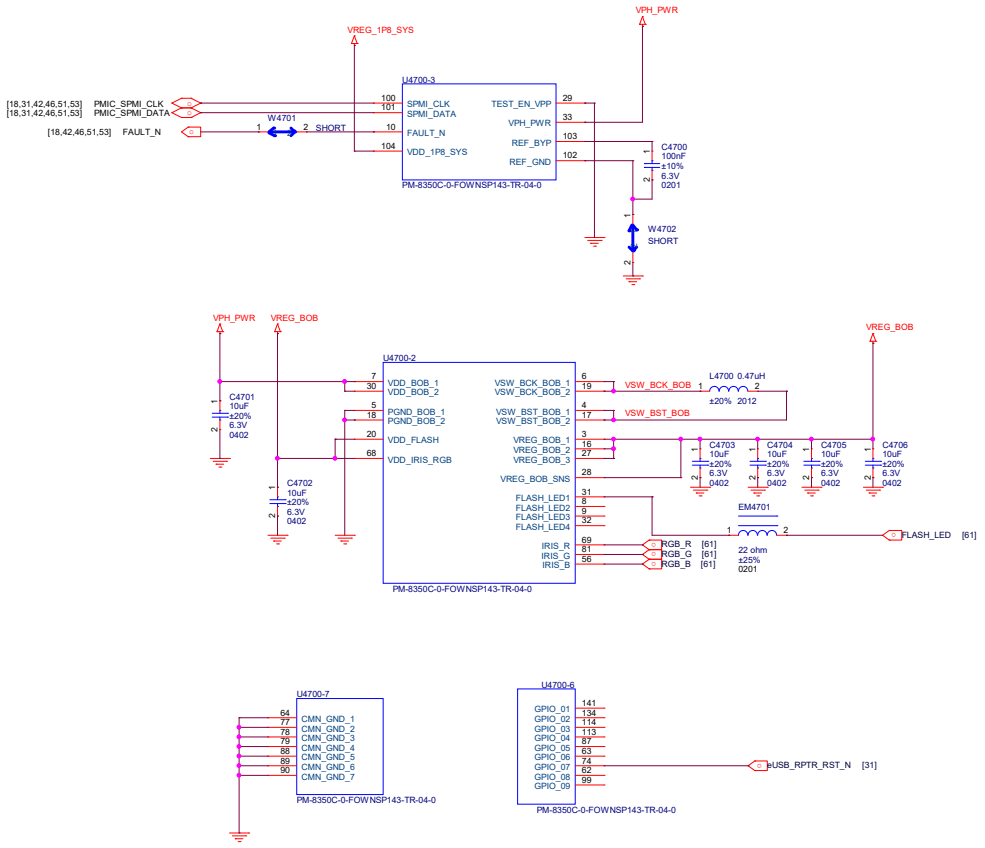

Title	M80_MAIN
Size A3	Document Number PM8350C CTRL&GND
Date: Thursday, June 01, 2023	Sheet

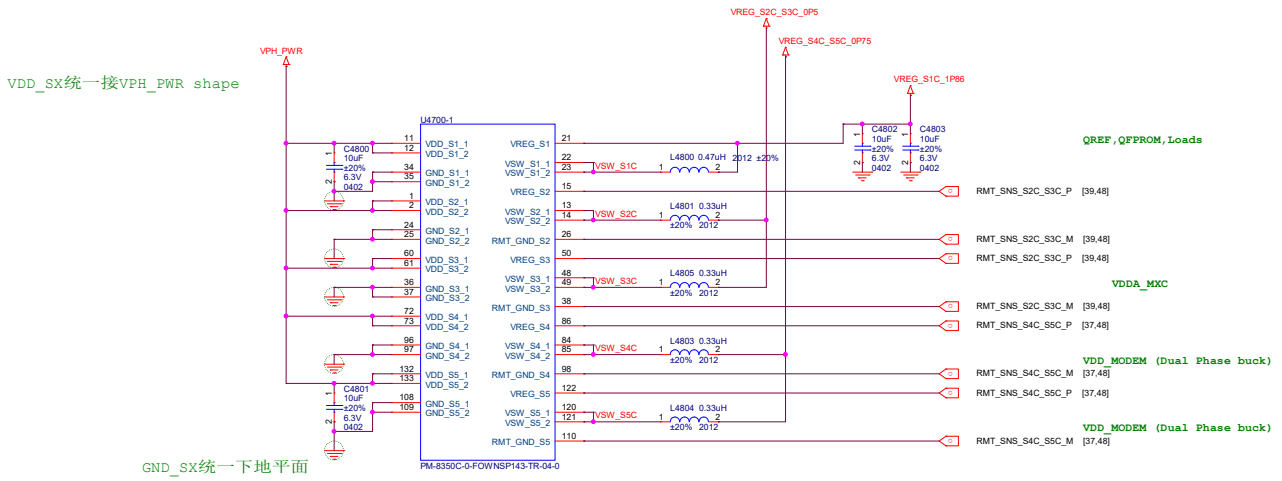

Title	M80_MAIN
Size A3	Document Number PM8350C BUCK CONVERTER1
Date: Thursday, June 01, 2023	Sheet 48

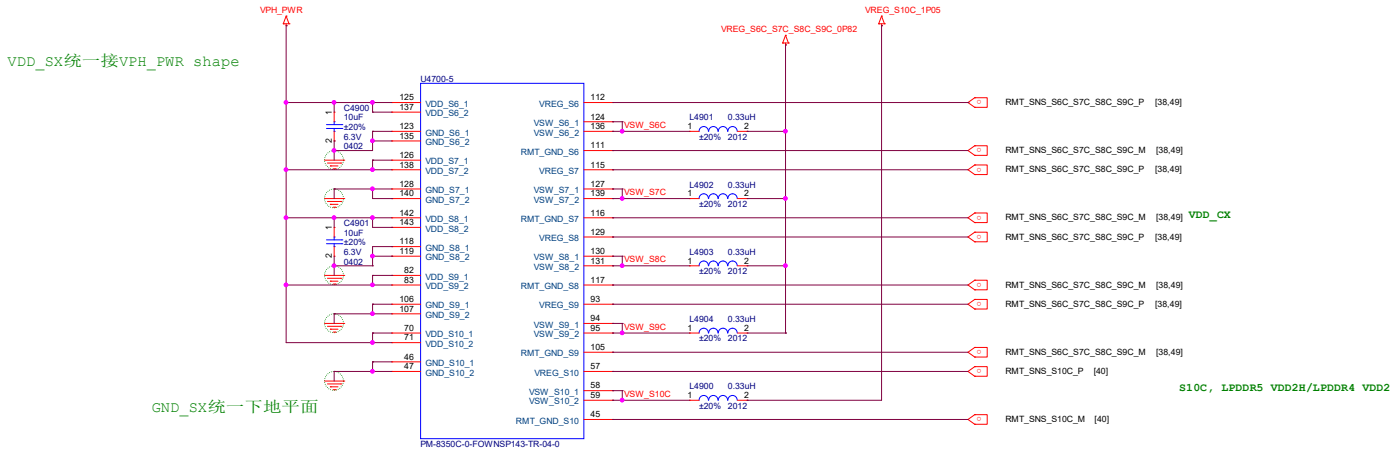

Title	M80_MAIN
Size A3	Document Number PM8350C BUCK CONVERTER2
Date: Thursday, June 01, 2023	Sheet

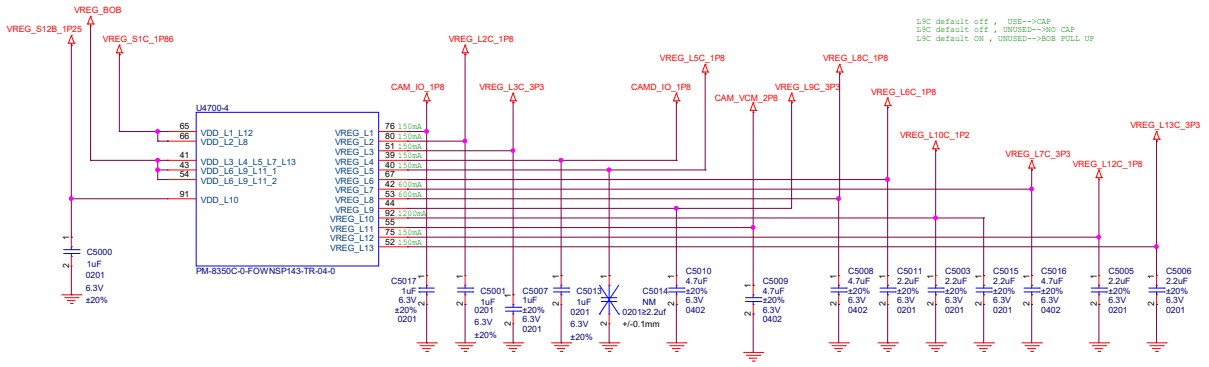

Title	M80_MAIN
Size A3	Document Number PM8350C LDOs
Date: Thursday, June 01, 2023	Sheet 50

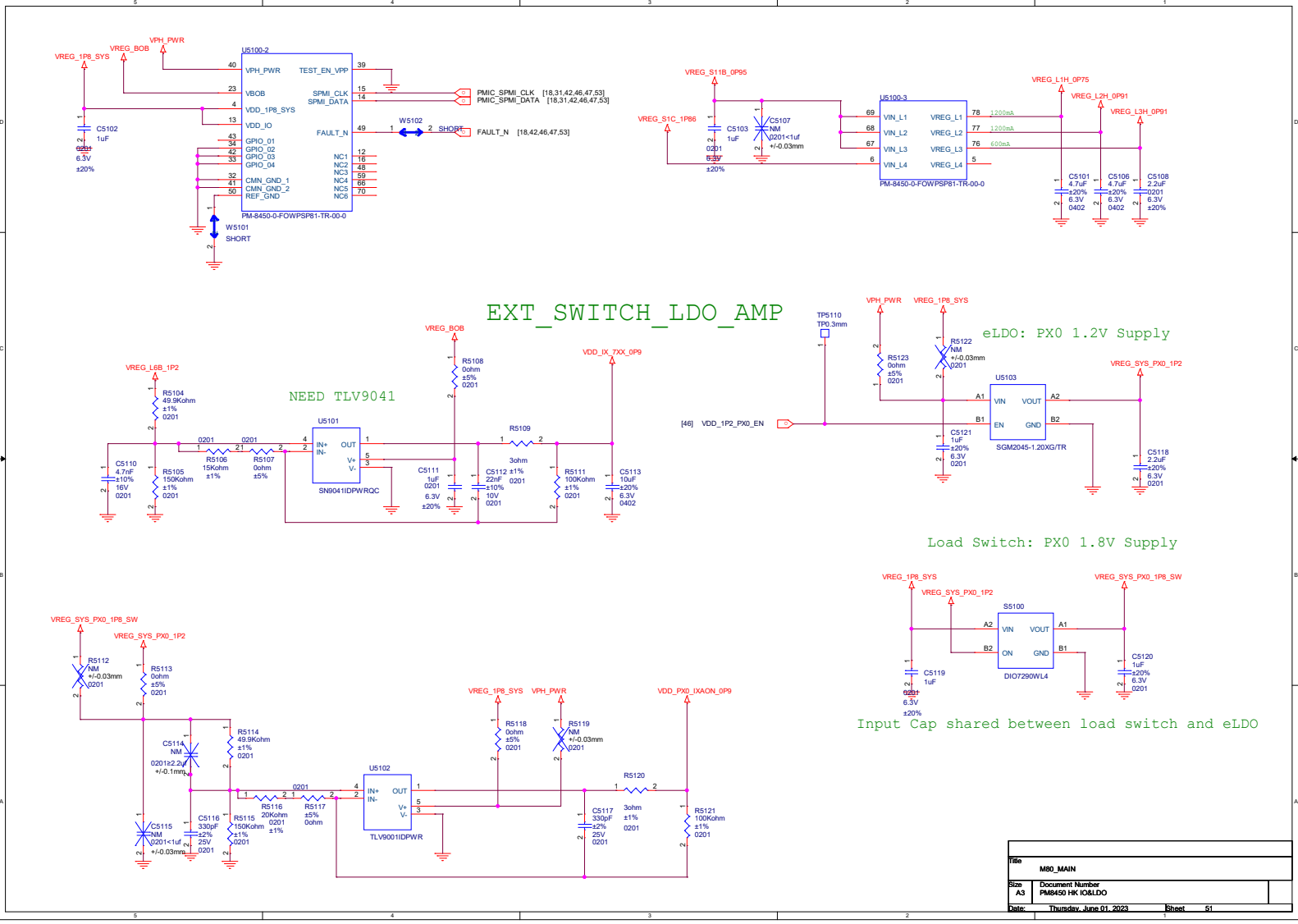

Title	M80_MAIN
Size A3	Document Number PM8450 HK IO&LDO
Date: Thursday, June 01, 2023	Sheet 51

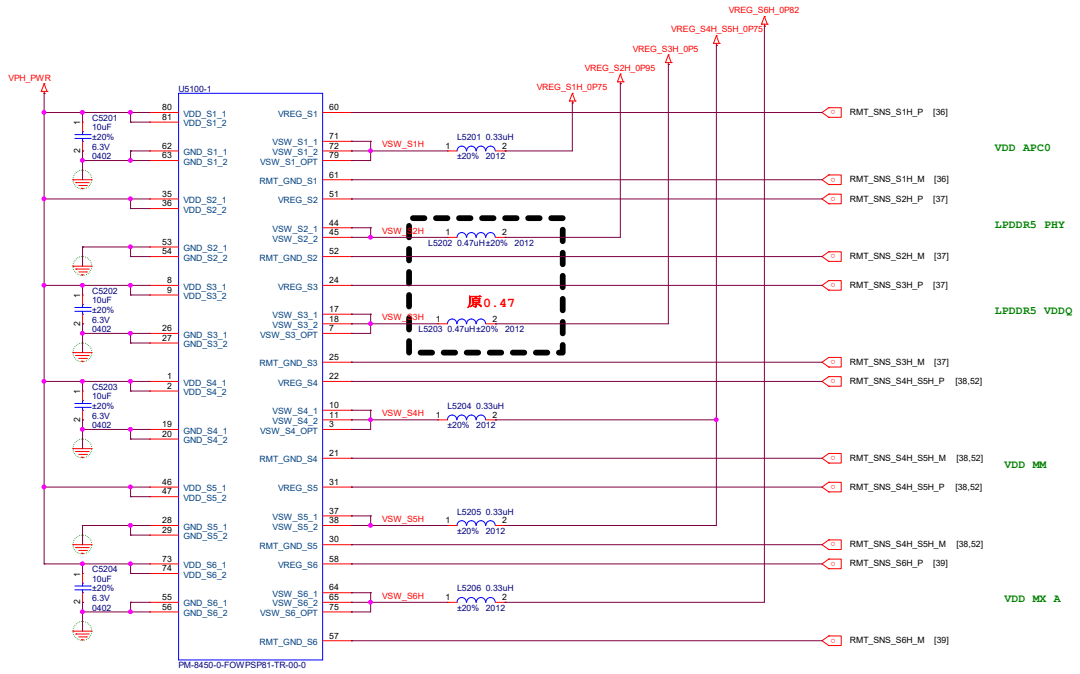

Title	M80_MAIN
Size A3	Document Number PM8450 BUCK
Date: Thursday, June 01, 2023	Sheet 52

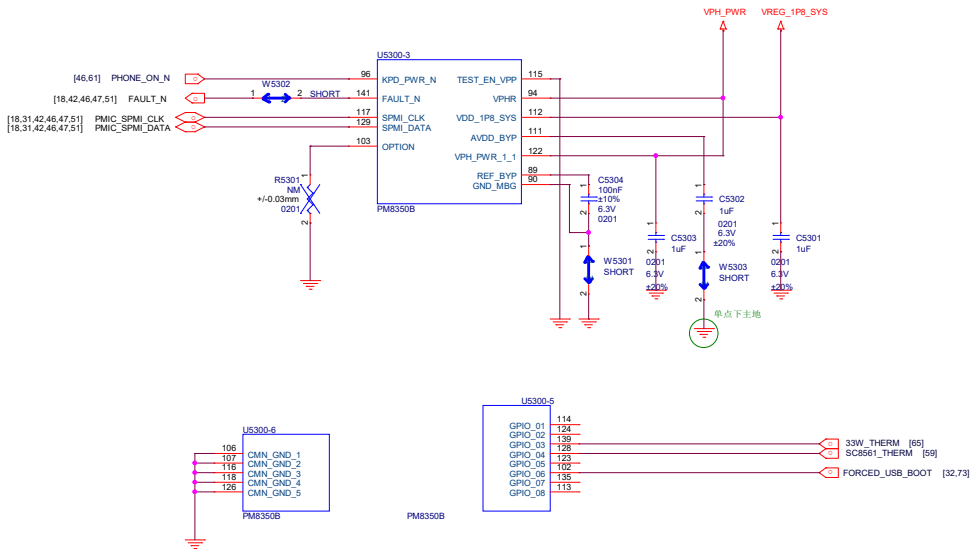

Title	M80_MAIN		
Size A3	Document Number PM8350B CTRL&GND		
Date:	Thursday, June 01, 2023	Sheet	53

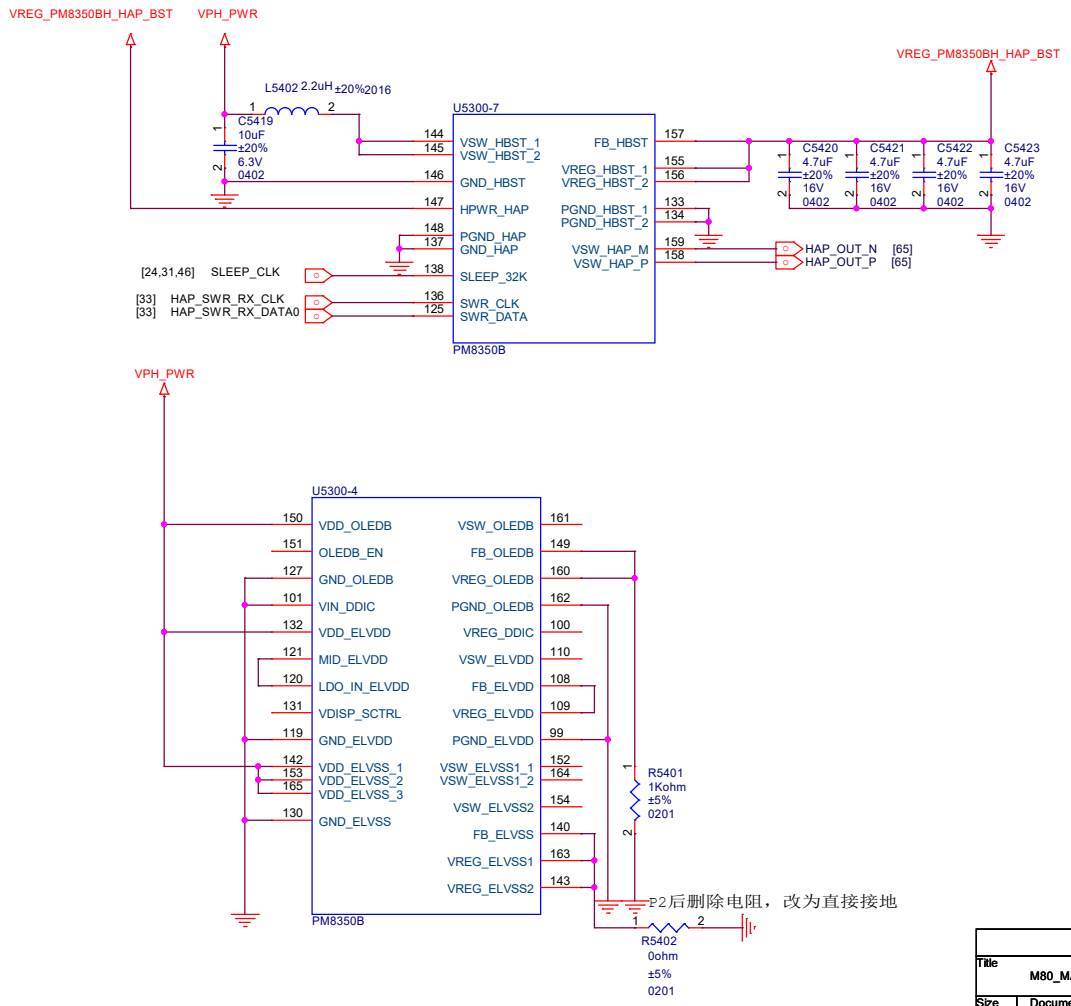

Title	M80_MAIN
Size A4	Document Number PM8350B HAPTIC&OLED
Date: Thursday, June 01, 2023	Sheet 54

PM8350B---1S BATTERY ,low voltage VIBRATOR DRIVER
PM8350BH---1S BATTERY ,high voltage VIBRATOR DRIVER
PM8350BHS---2S BATTERY ,high voltage VIBRATOR DRIVER

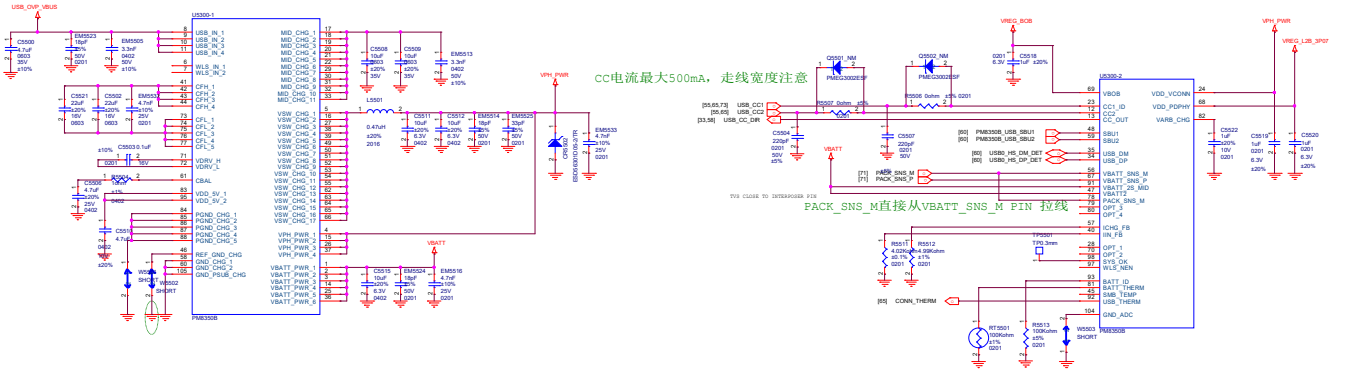

33W 反向充电预留

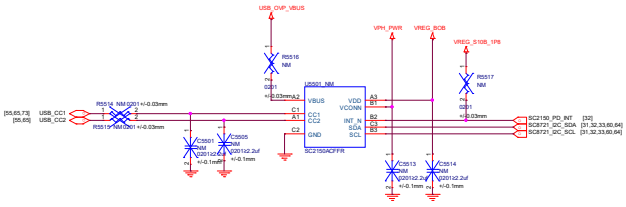

File	M80_MAIN
Size A2	Document Number PM8350B Charger
Date: Thursday, June 01, 2023	Sheet

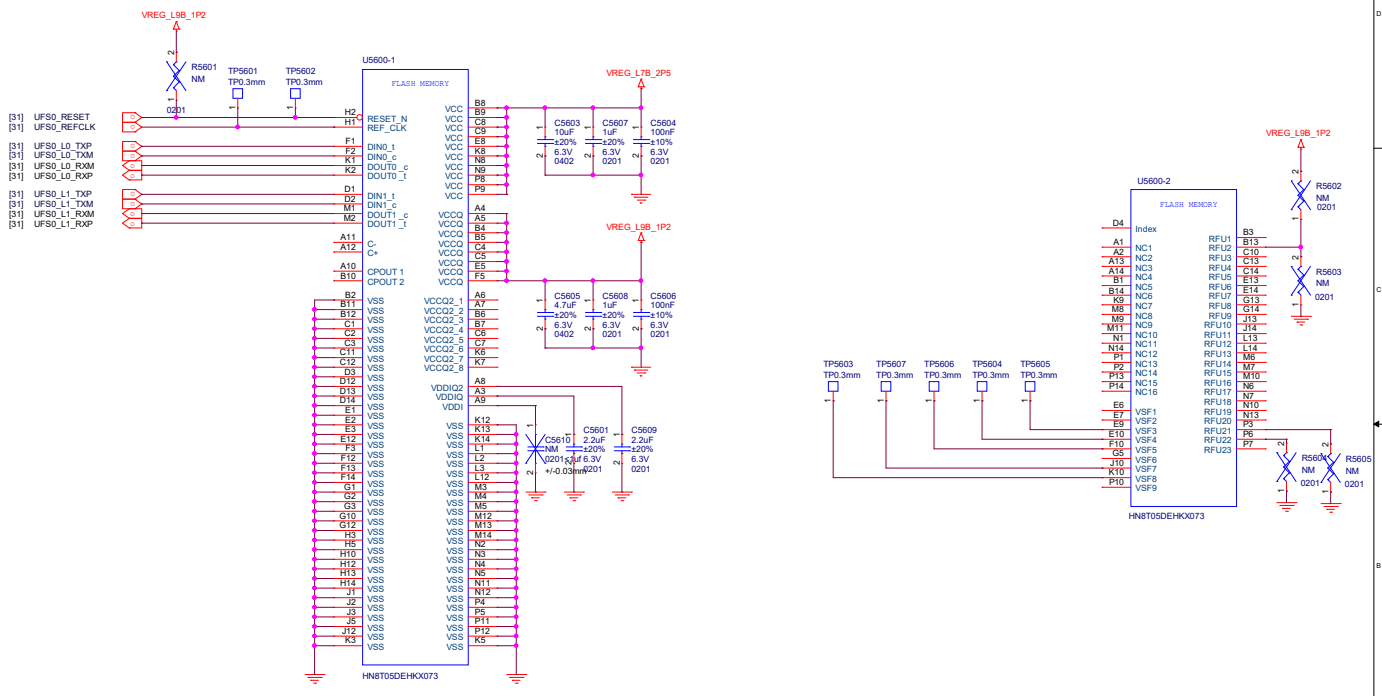

Title	M80_MAIN
Size A3	Document Number MEMORY-1
Date: Thursday, June 01, 2023	Sheet 56

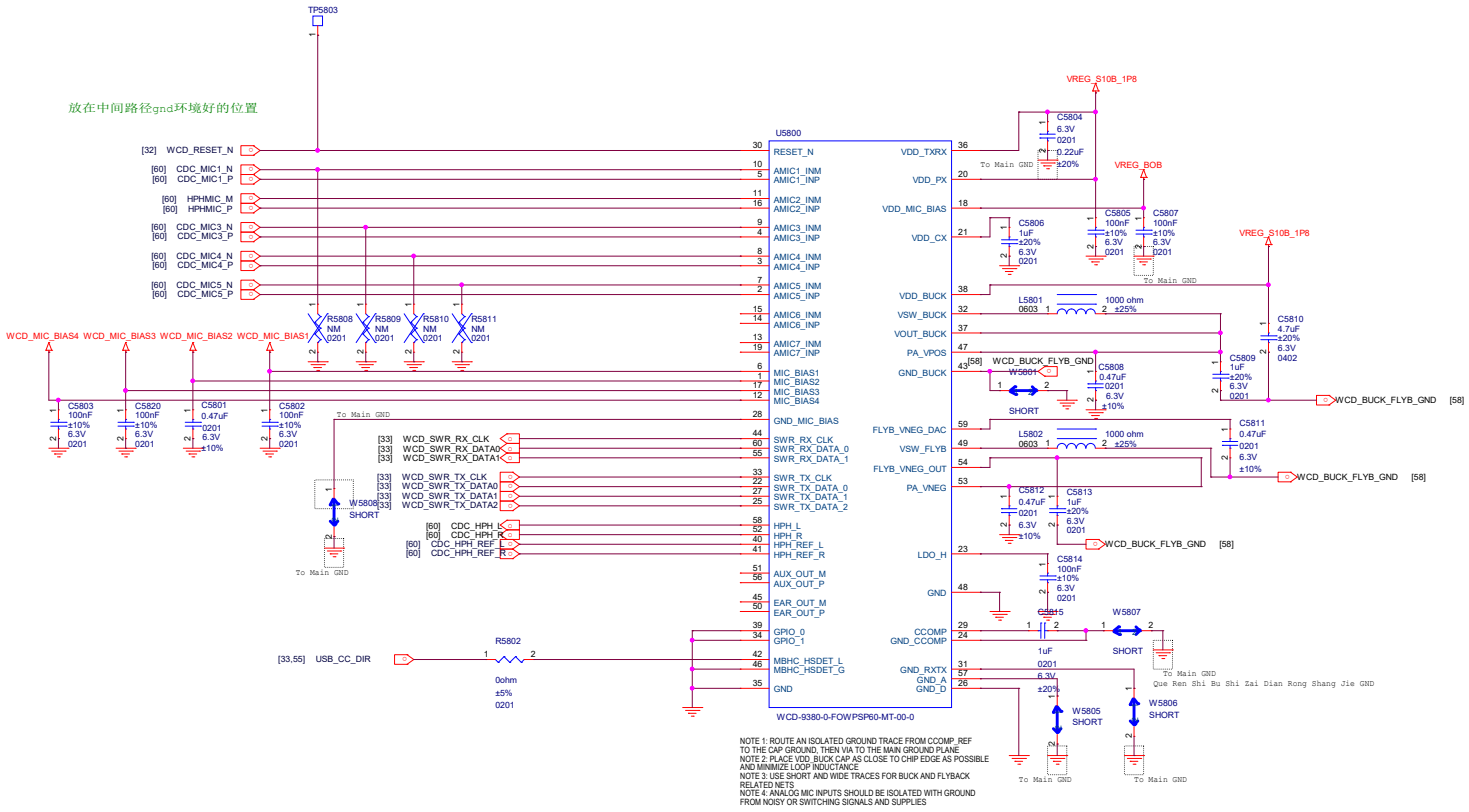

Title	M80_MAIN
Size A3	Document Number WCD9380
Date: Thursday, June 01, 2023	Sheet 58

67W 有线充电

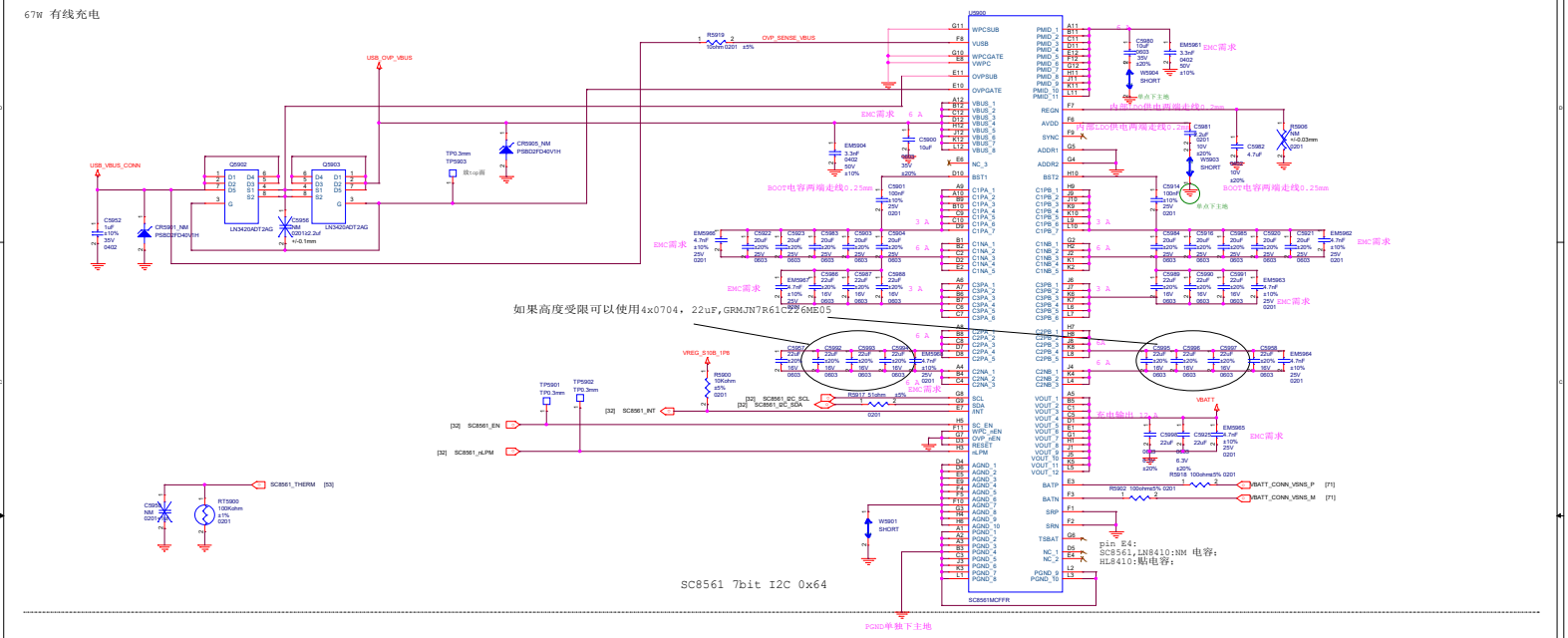

SC8561 7bit I2C 0x64

33W 反向充电续流

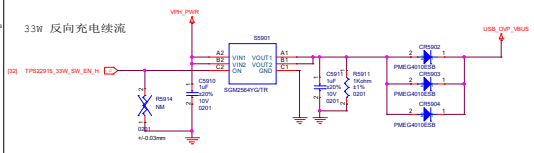

File	M80_MAIN
Size A2	Document Number SC8561
Date: Thursday, June 01, 2023	Sheet 59

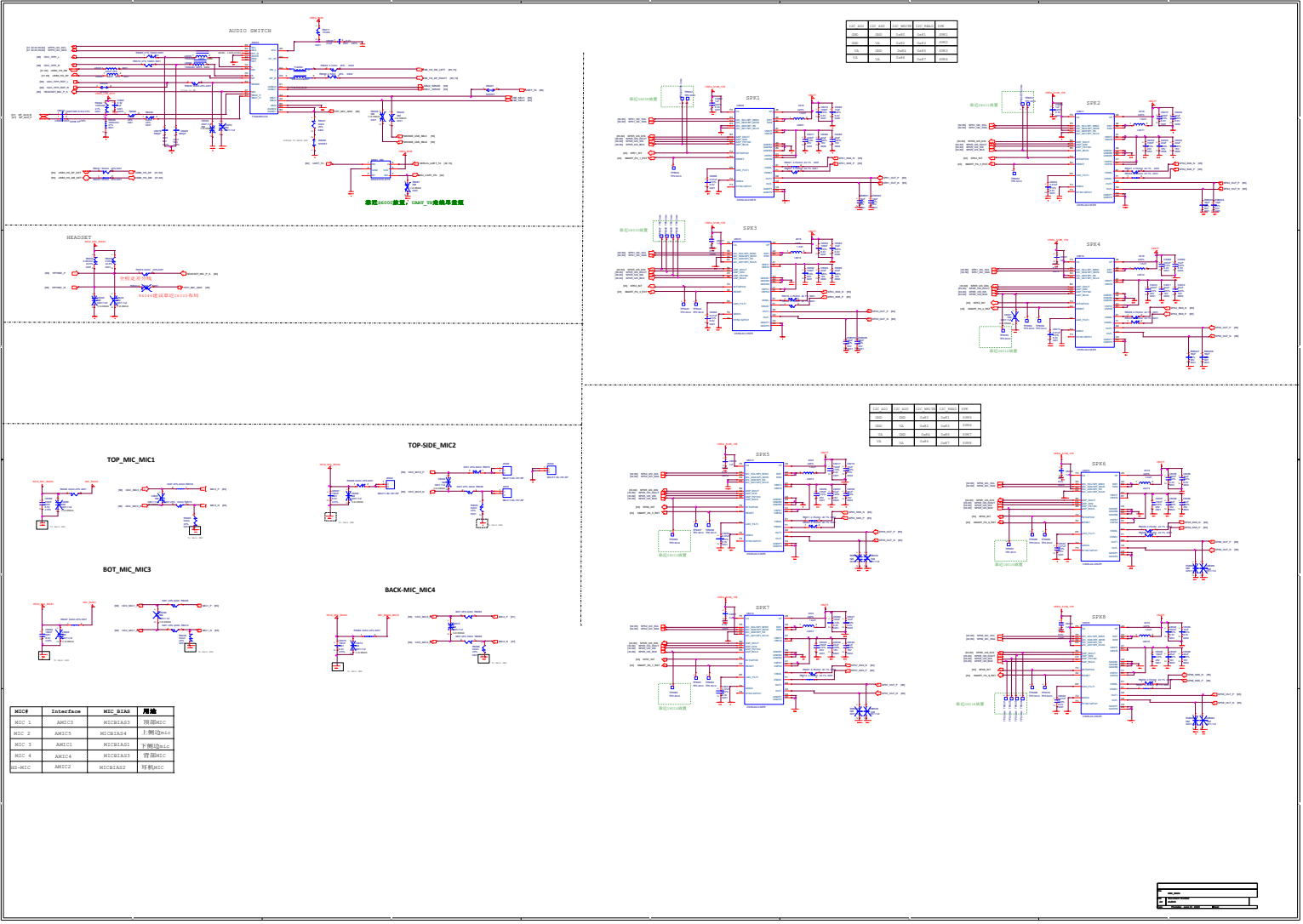

MIC#	Interface	MIC_BIAS	用途
MIC 1	AMIC3	MICBIAS3	顶部MIC
MIC 2	AMIC5	MICBIAS4	上侧边mic
MIC 3	AMIC1	MICBIAS1	下侧边mic
MIC 4	AMIC4	MICBIAS3	背部MIC
HS-MIC	AMIC2	MICBIAS2	耳机MIC

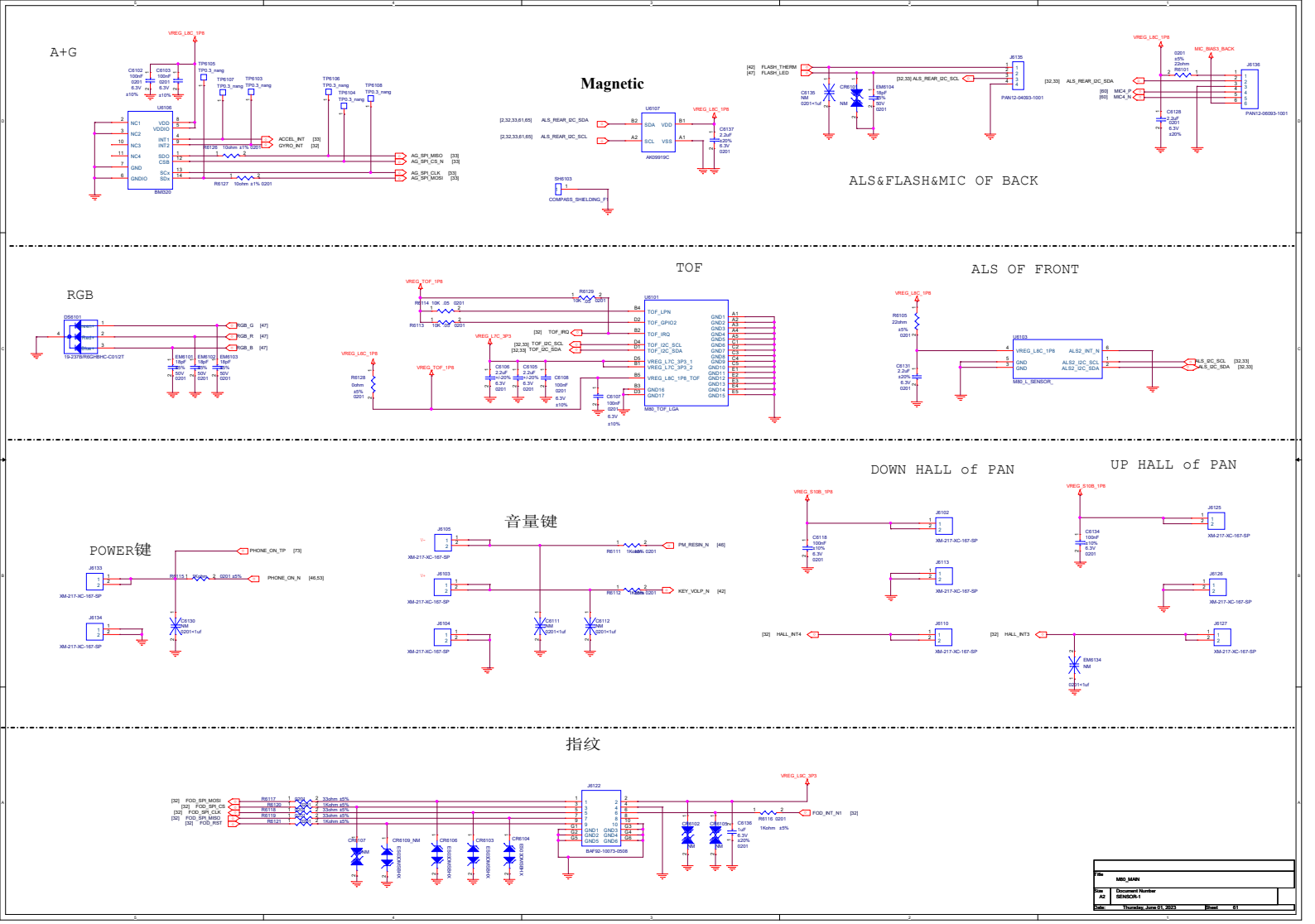
A+G
Magnetic
ALS&FLASH&MIC OF BACK
RGB
TOF
ALS OF FRONT
POWER键
音量键
DOWN HALL of PAN
UP HALL of PAN
指纹
M80_MAIN
Document Number
SENSOR-1
Thursday, June 01, 2023
Sheet 61

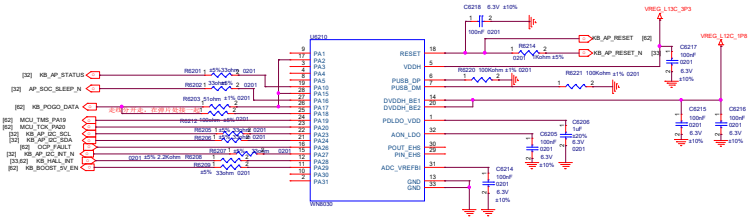

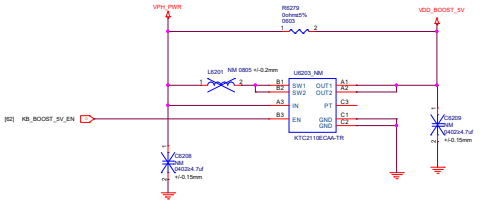

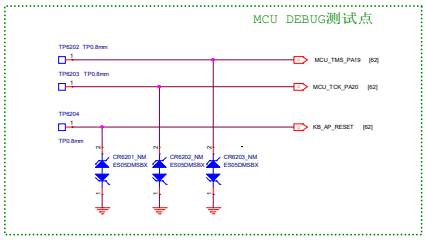

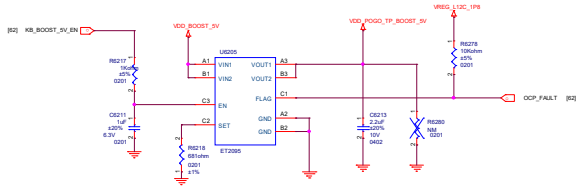

Current Limit Setting: 1.5A (Typ) 1350mA~1650mA

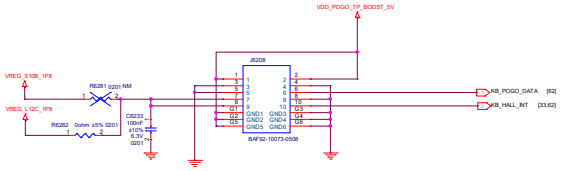

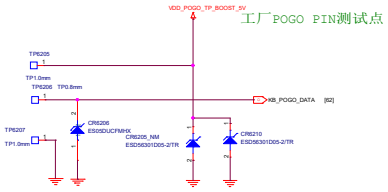

Title	M80_MAIN
Size A2	Document Number SENSOR-2
Date: Thursday, June 01, 2023	Sheet

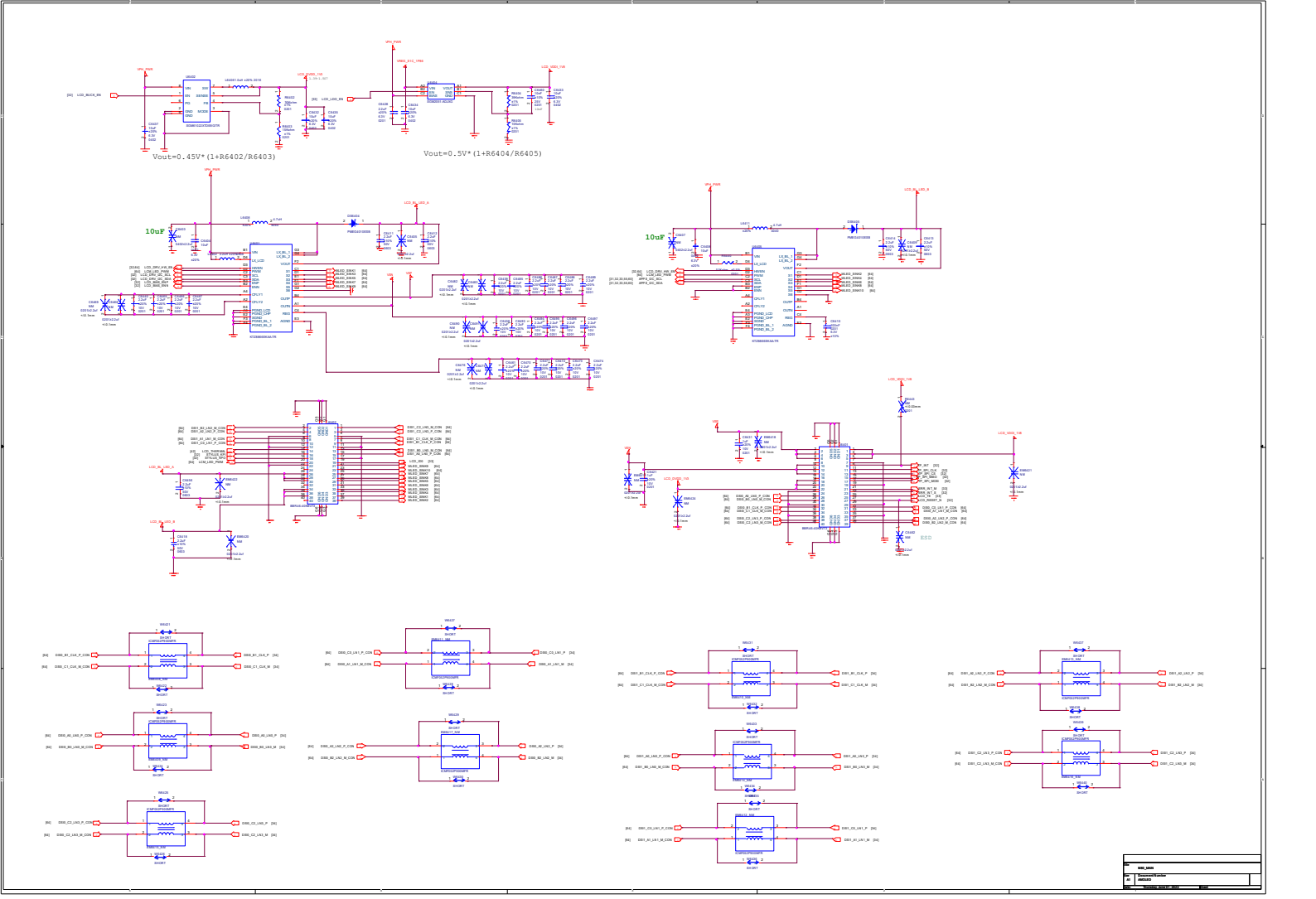
Vout=0.45V*(1+R6402/R6403)
Vout=0.5V*(1+R6404/R6405)
10uF
10uF

TO SUB

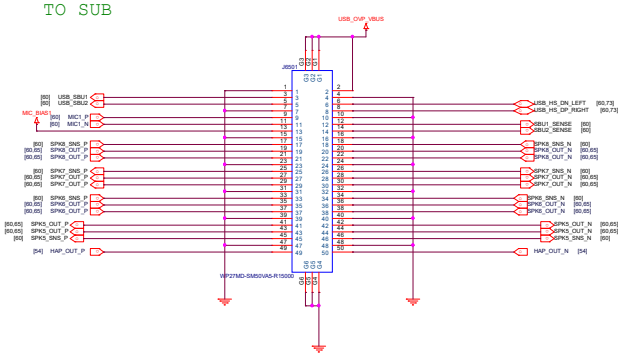

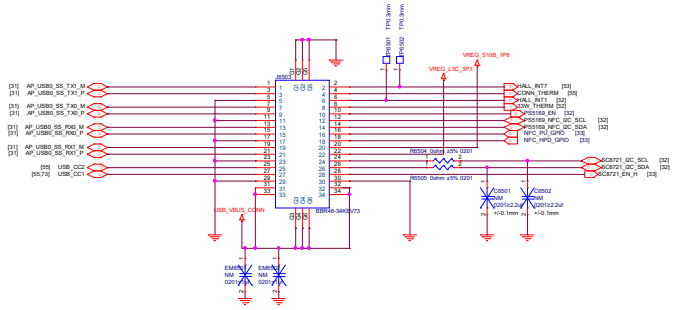

SPK+MIC

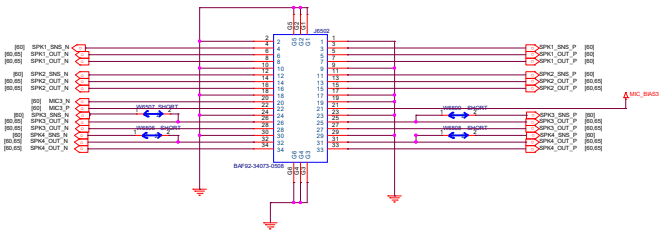

Title	M80_MAIN	
Size A2	Document Number STB	
Date: Thursday, June 01, 2023	Sheet	

WIDE 50M(S5KJN1)

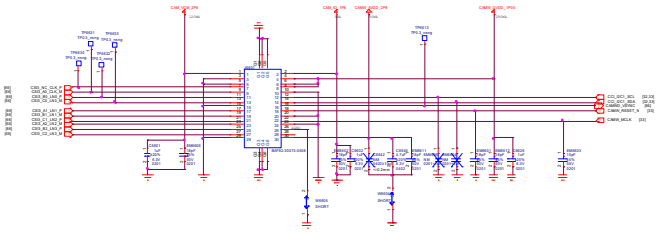

2M DEEP (SC202CS)

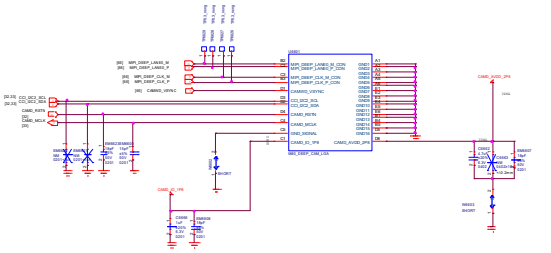

Title	CAMERA
Size	Document Number
A3	CAMERA
Date: Thursday, March 11, 2010	Sheet

Front 20M （IMX596）

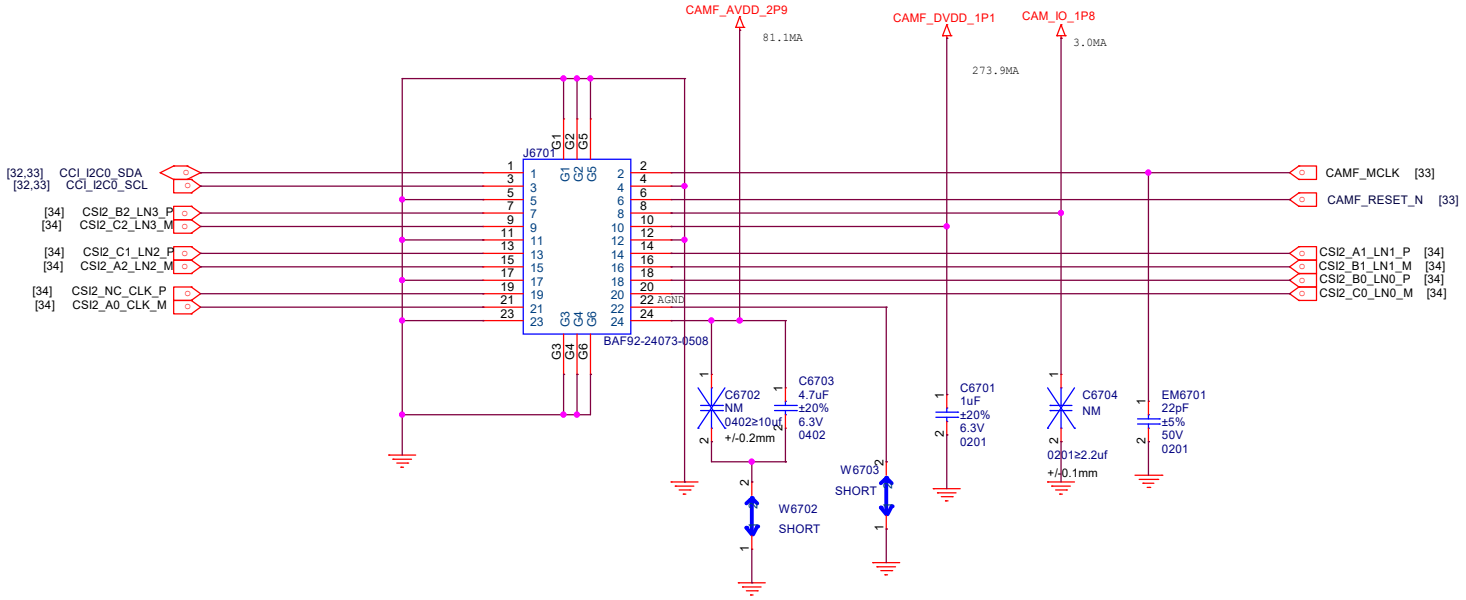

Title	M80_MAIN
Size A4	Document Number FRONT CAMERA
Date: Thursday, June 01, 2023	Sheet 67

Wide DVDD

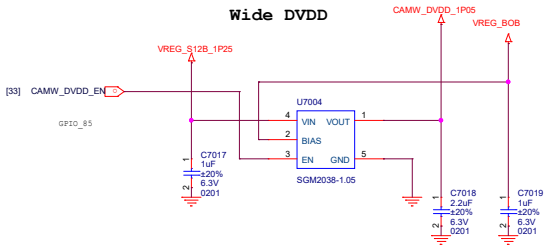

FRONT DVDD

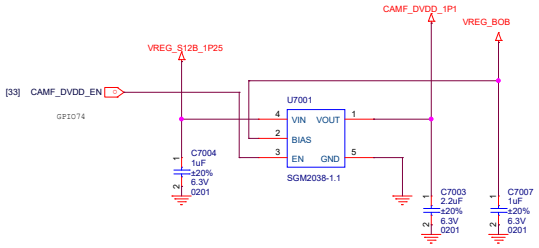

Wide AVDD

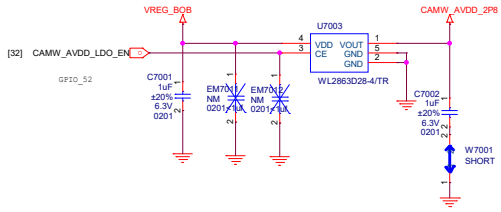

FRONT AVDD

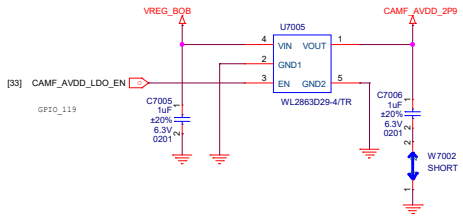

Deep AVDD

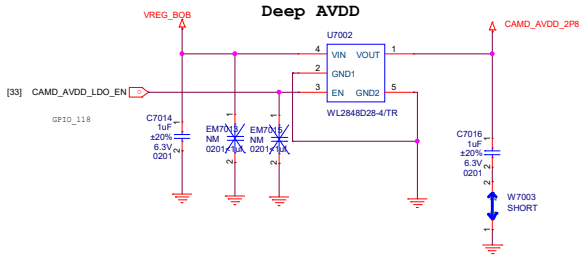

Title	M80_MAIN
Size A3	Document Number CAMERA LDOs
Date: Thursday, June 01, 2023	Sheet 70

BATTERY CONNECT

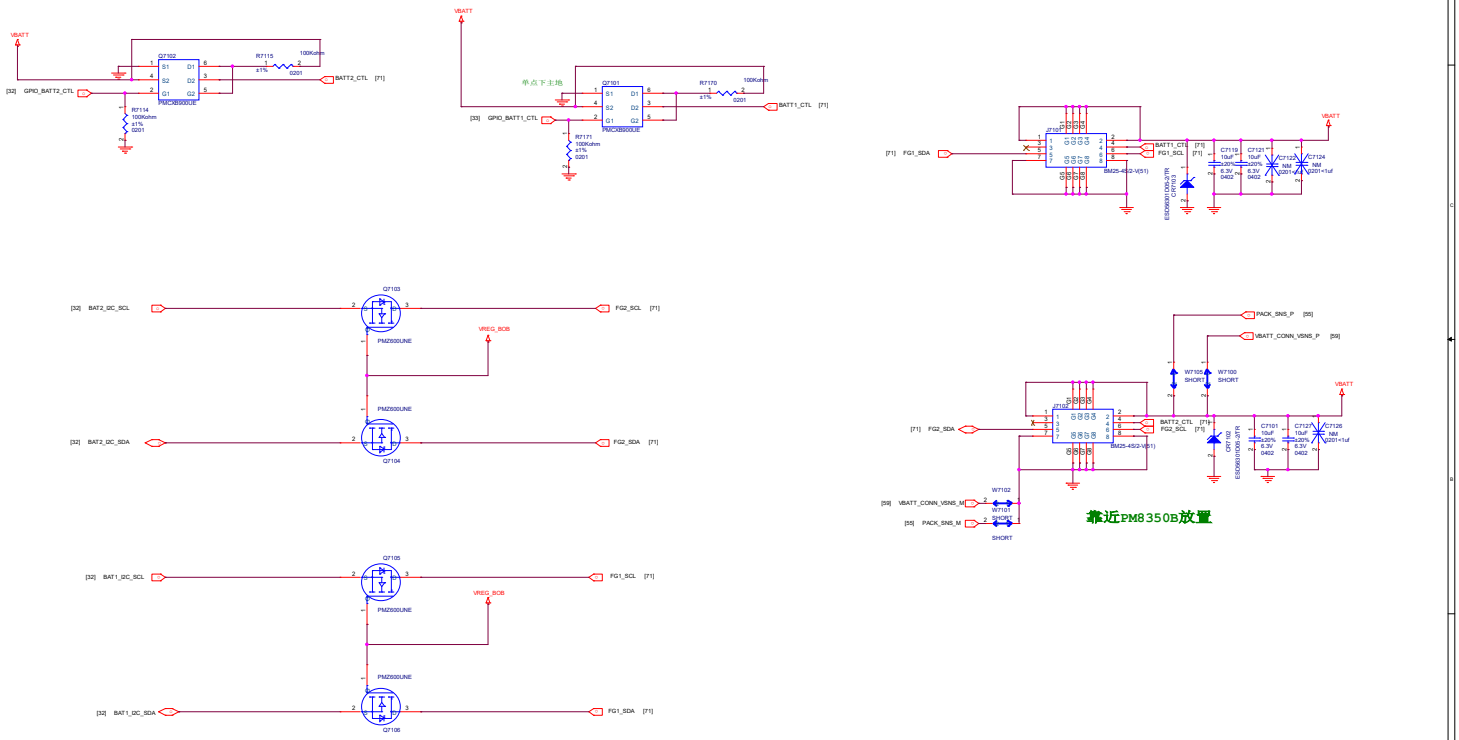

Title	M80_MAIN
Size	A2
Document Number	Reserved(for MIL)
Date:	Thursday, June 01, 2023
Sheet	71

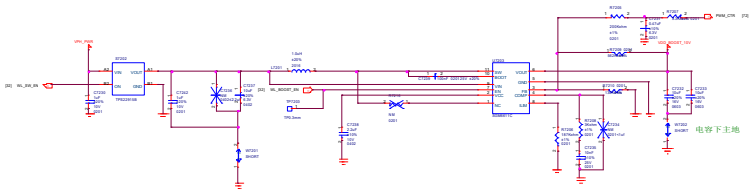

Wireless charge

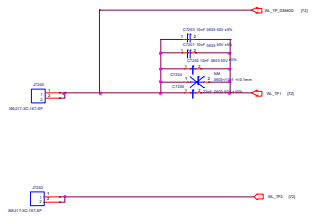

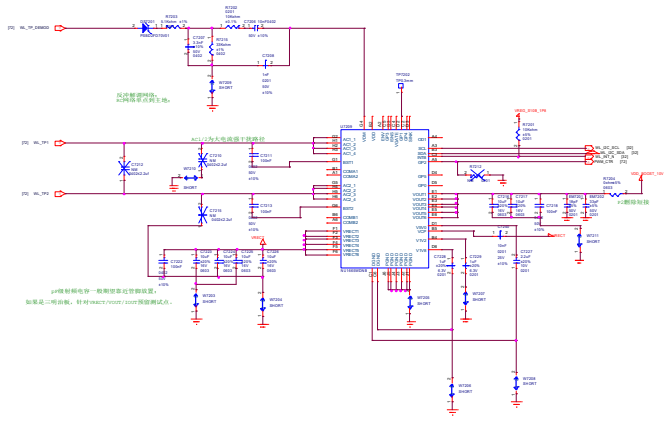

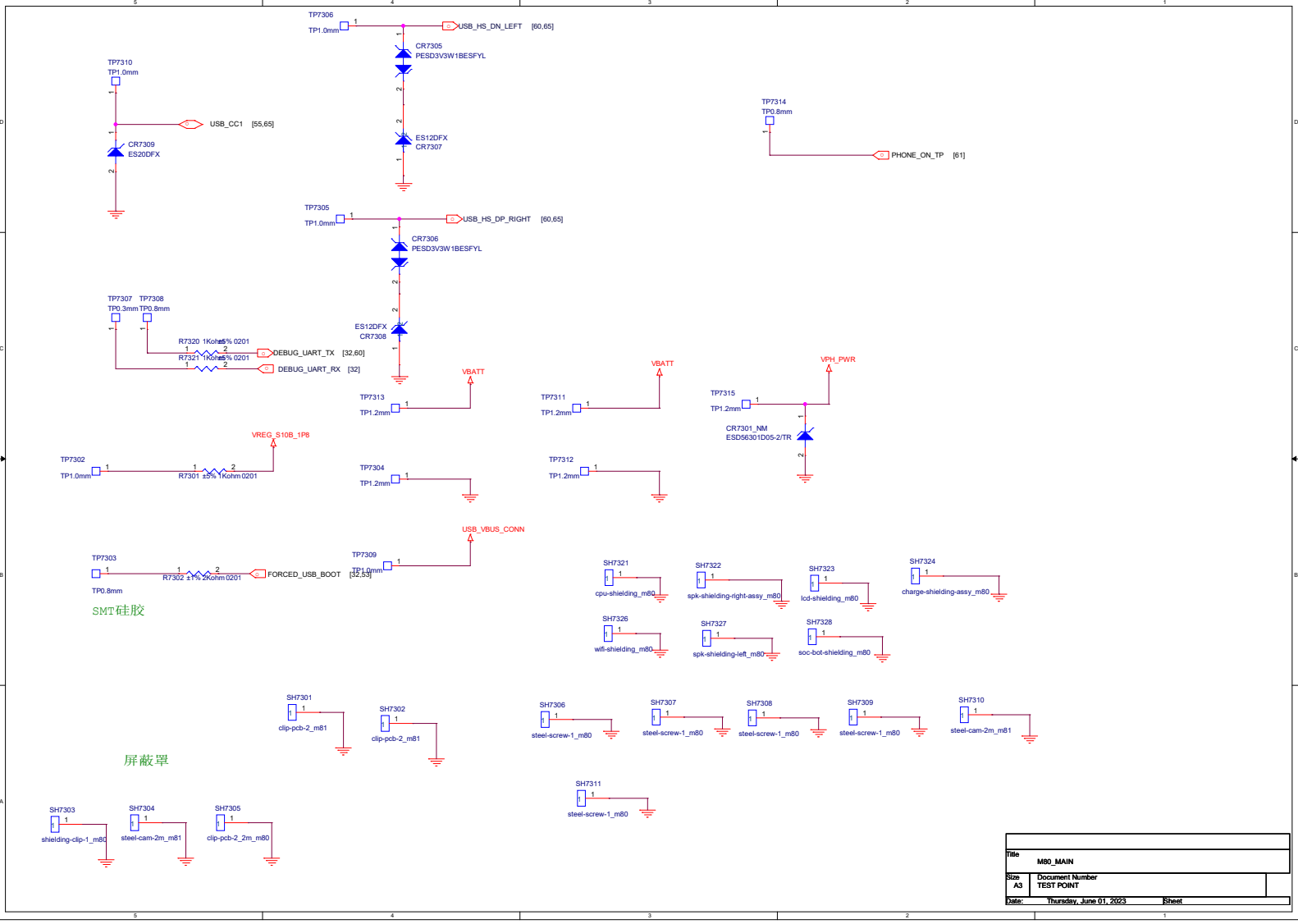

Title	M80_MAIN
Size A3	Document Number TEST POINT
Date: Thursday, June 01, 2023	Sheet